ADOPTED MAY 2009
LAST REVISED MARCH 2015

EXHIBIT "A"

TYPICAL DETAILS

BOROUGH OF CONSHOHOCKEN

MONTGOMERY COUNTY, PENNSYLVANIA

TABLE OF CONTENTS

STANDARD NOTES

DETAIL – 1: SINGLE LOT EROSION CONTROL

DETAIL – 2: CONCRETE CURB

DETAIL – 3: CONCRETE SIDEWALK

DETAIL – 4: CONCRETE DRIVEWAY APRON

DETAIL – 5: DRIVEWAY ACCESSIBLE ROUTE

DETAIL – 6: HANDICAPPED RAMP NOTES

DETAIL – 7: TYPE 1 HANDICAPPED RAMP

DETAIL – 8: TYPE 4A HANDICAPPED RAMP

DETAIL – 9: TYPE 2 HANDICAPPED RAMP

DETAIL – 10: HANDICAPPED RAMPS WITH SHARED LANDING

DETAIL – 11: ALLEY INTERSECTION WITH BOROUGH STREET

DETAIL – 12: PARALLEL ROADWAY TRENCH AND PAVEMENT RESTORATION

DETAIL – 13: UTILITY LATERAL TRENCH RESTORATION

DETAIL – 14: TYPICAL TRENCH DETAIL FOR GRASSED AREA

DETAIL – 15: STREET DEGRADATION RESURFACING

DETAIL – 16: ROOF DRAINS

DETAIL – 17: STEEL TUBE ROOF DRAIN ENCASEMENT

DETAIL – 18: STORM SEWER INLETS

DETAIL – 19: RECESSED INLET GRATE AND MANHOLE COVER

DETAIL – 20: PERMEABLE PAVER SURFACE

G:\Drafting\Drafting\PA\CONSH\detail booklet aug 2007\DETAILS BOOKLET.dwg, 3/24/2015 10:10:56 AM, Adobe PDF 1440.pc3

ADOPTED MAY 2009

LAST REVISED MARCH 2015

1. THE PROPERTY OWNER SHALL BE RESPONSIBLE FOR THE QUALITY AND CORRECTNESS OF COMPLETED WORK. THE PROPERY OWNER MAY DESIGNATE A CONTRACTOR, CONSULTANT OR OTHER AGENT TO COORDINATE INSPECTIONS WITH THE BOROUGH. THE PROPERTY OWNER IS RESPONSIBLE FOR ALL OUTSIDE CONSULTANT FEES INCURRED BY THE BOROUGH.

2. ANY COMPLETED WORK THAT DOES NOT COMPLY WITH APPLICABLE STANDARDS SUCH AS THE AMERICANS WITH DISABILITIES ACT (ADA), PENNDOT SPECIFICATIONS AND CONSTRUCTION STANDARDS, OR THE BOROUGH OF CONSHOHOCKEN TYPICAL DETAILS SHALL BE REMOVED AND REPLACED. PROPERTY OWNERS ARE ENCOURAGED TO WITHOLD PAYMENT FOR WORK PERFORMED UNTIL ALL WORK AND RESTORATIONS ARE ACCEPTED BY THE BOROUGH IN WRITING.

3. THE PROPERTY OWNER SHALL BE RESPONSIBLE FOR ENSURING COMPLIANCE WITH THE BOROUGH STORMWATER MANAGEMENT ORDINANCE. SPECIFICALLY, ALL WORK SITES SHALL BE PROTECTED FROM EROSION AND SEDIMENT RUNOFF IN ACCORDANCE WITH MONTGOMERY COUNTY CONSERVATION DISTRICT REQUIREMENTS. FAILURE TO INSTALL AND MAINTAIN ACCEPTABLE EROSION CONTROLS WILL RESULT IN WORK STOPPAGES AND FINES IN ACCORDANCE WITH THE BOROUGH ORDINANCE.

4. EROSION CONTROL INLET PROTECTION SHALL BE INSTALLED IN THE NEAREST DOWNSTREAM INLET OF ALL WORK SITES. PIPE TRENCHES SHALL BE PUMPED THROUGH A WATER FILTER BAG.

5. THE CONTRACTOR IS RESPONSIBLE FOR ALL CONSTRUCTION LAYOUT. THE BOROUGH INSPECTOR WILL VERIFY THAT THE APPROPRIATE CONSTRUCTION DETAILS ARE BEING FOLLOWED AND THAT THE APPROPRIATE METHODS ARE BEING USED. THE BOROUGH INSPECTOR DOES NOT APPROVE ANY PHYSICAL PRODUCT UNTIL THE WORK IS COMPLETE. ANY PERCEIVED APPROVAL OF LAYOUT, FORMWORK, ETC., DOES NOT ABSOLVE THE CONTRACTOR FROM ENSURING THAT THE FINAL PRODUCT COMPLIES WITH ALL APPLICABLE STANDARDS.

STANDARD NOTES
BOROUGH OF CONSHOHOCKEN
MONTGOMERY COUNTY, PENNSYLVANIA

ADOPTED MAY 2009

LAST REVISED MARCH 2015

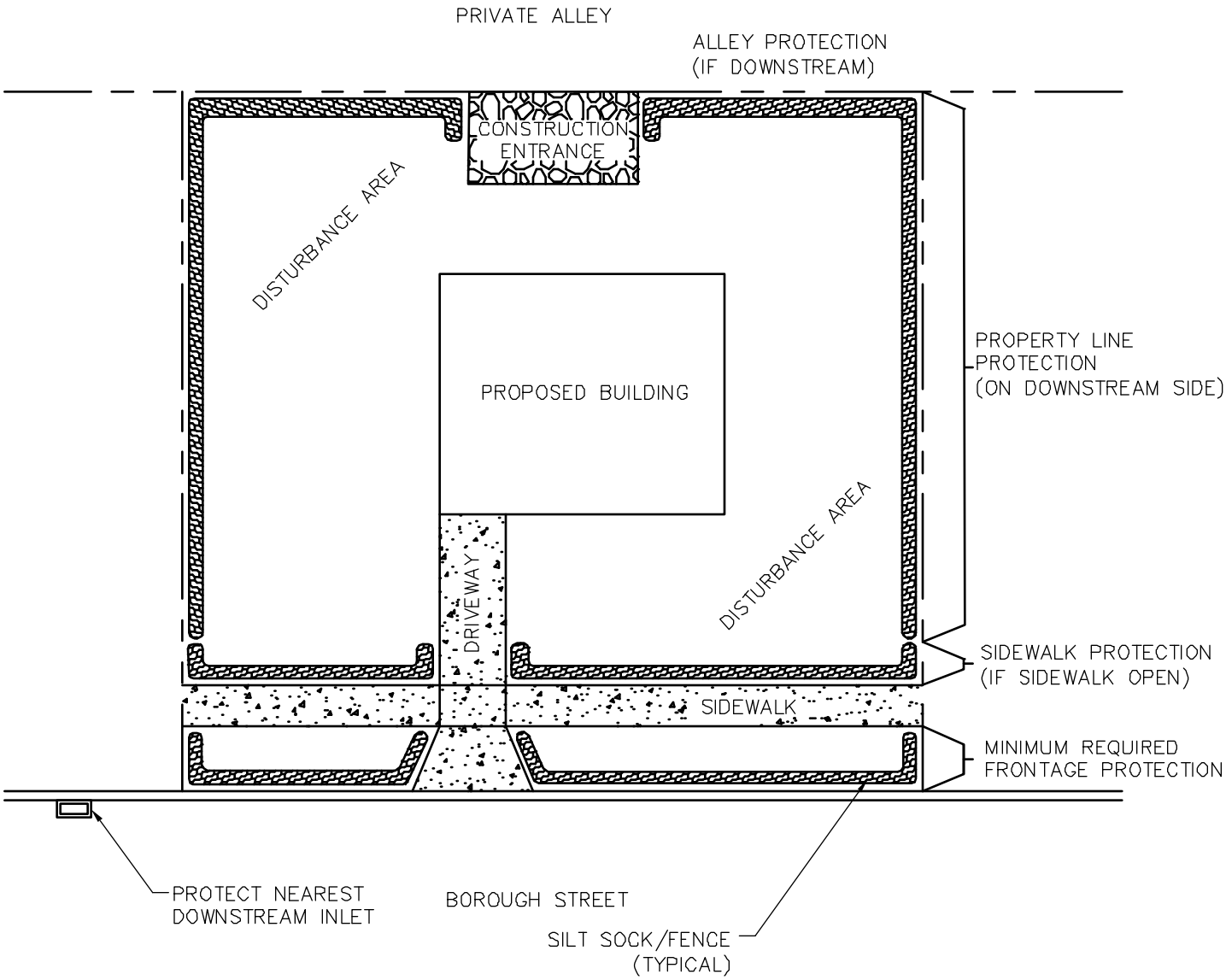

SINGLE LOT EROSION CONTROL DETAIL

N.T.S.

NOTES:

1. ADDITIONAL EROSION CONTROL MEASURES MAY BE REQUIRED BY THE BOROUGH CODE DEPARTMENT IN ACCORDANCE WITH BOROUGH ORDINANCE 1–2008.

2. ADDITIONAL EROSION CONTROL MEASURES MAY BE REQUIRED BY THE MONTGOMERY COUNTY CONSERVATION DISTRICT IN ACCORDANCE WITH 25 PA CODE CHAPTER 102.

3. FAILURE TO MAINTAIN EROSION CONTROL MEASURES WILL RESULT IN AN IMMEDIATE WORK STOPPAGE UNTIL ALL EROSION CONTROL MEASURES HAVE BEEN RESTORED TO THE SATISFACTION OF THE BOROUGH CODE DEPARTMENT.

4. SILT SOCK/FENCE SHALL BE INSTALLED AND MAINTAINED PER THE PADEP EROSION AND SEDIMENT POLLUTION CONTROL PROGRAM MANUAL, LATEST EDITION.

5. DIAMETER OF SILT SOCK SHALL BE 8" UNLESS OTHERWISE DIRECTED. LARGER SILT SOCK MAY BE REQUIRED FOR SITES WITH A LARGER CONTRIBUTING DISTURBANCE AREA.

DETAIL – 1

TYPICAL DETAILS

BOROUGH OF CONSHOHOCKEN

MONTGOMERY COUNTY, PENNSYLVANIA

G:\Drafting\Drafting\PA\CONSH\detail booklet aug 2007\DETAILS BOOKLET.dwg, 3/24/2015 10:12:09 AM, Adobe PDF 144dpi.pc3

ADOPTED MAY 2009

LAST REVISED MARCH 2015

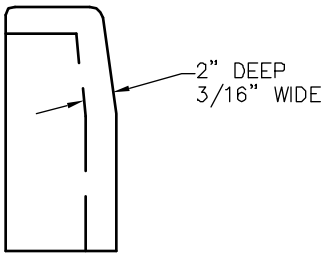

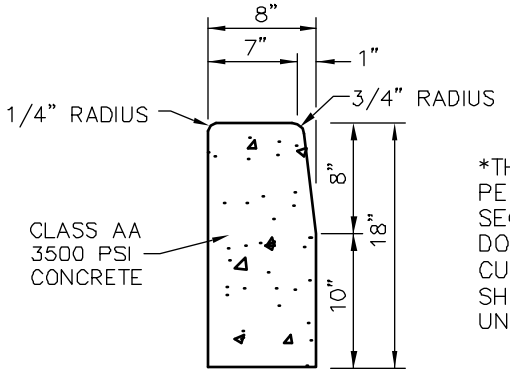

*THIS DETAIL IS THE STANDARD PENNDOT CONCRETE CURB CROSS SECTION. THE DIMENSIONS SHOWN DO NOT REFLECT THE DESIRED CURB REVEAL. ALL CURB SHALL HAVE A 6" CURB REVEAL UNLESS OTHERWISE DIRECTED.

DETAIL "A" CONTRACTION JOINT

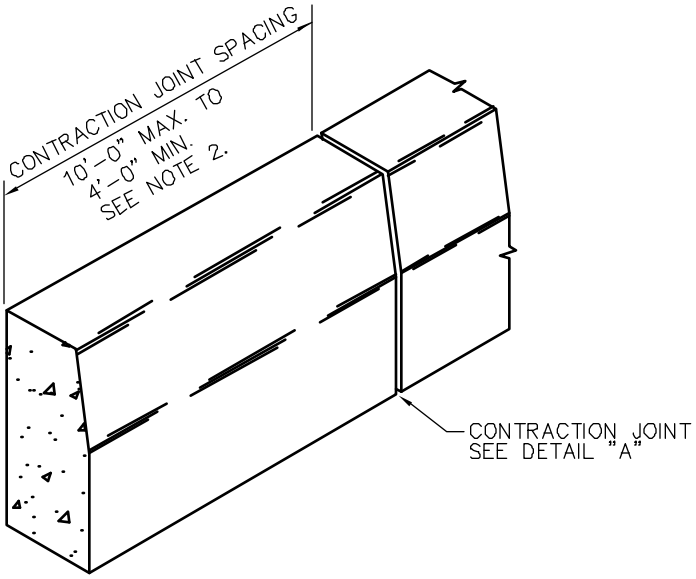

TYPICAL CROSS SECTION

NOTES

1. PROVIDE MATERIALS AND CONSTRUCTION MEETING THE REQUIREMENTS OF PUBLICATION 408/2000, SECTION 630 FOR PLAIN CEMENT CONCRETE CURB AND DEPRESSED CURB, SECTION 640 FOR PLAIN CEMENT CONCRETE GUTTER AND SECTION 641 FOR PLAIN CEMENT CONCRETE CURB GUTTER.
2. SPACE CONTRACTION JOINTS IN UNIFORM LENGTHS OR SECTIONS.
3. PLACE 3/4" PREMOLDED EXPANSION JOINT FILLER MATERIAL AT STRUCTURES AND AT THE END OF THE WORK DAY. CUT MATERIAL TO CONFORM TO AREA ADJACENT TO CURB OR TO CONFORM TO CROSS SECTIONAL AREA OF CURB.
4. SEE RC-50M FOR PLAIN CEMENT CONCRETE CURB SLOPED TOP TREATMENT AT END OF STRUCTURES.
5. ALL CONCRETE IS TO BE CLASS AA, 3500 PSI.
6. DEPRESSED CURB SHALL BE SLOPED 1/4" PER FOOT TOWARDS THE STREET.
7. CURB REPLACEMENT SHALL EXTEND TO THE NEAREST JOINT. SHOULD THE NEAREST JOINT EXTEND ACROSS A PROPERTY THE CURB MAY BE SAWCUT AT A LOCATION TO BE AND MARKED OUT BY THE BOROUGH.
8. CONTRACTOR SHALL PROVIDE EROSION CONTROLS TO CONTAIN OPEN EXCAVATIONS AND PROTECT THE NEAREST DOWNSTREAM INLET.
9. PROJECTS REQUIRING ONE (1.0) CUBIC YARD (CY) OR GREATER SHALL USE PLANT MIX CONCRETE DELIVERED BY A CONCRETE MIXING TRANSPORT TRUCK. 1.0 CY OF CONCRETE YIELDING APPROXIMATELY 27LF OF STANDARD CONCRETE CURB.

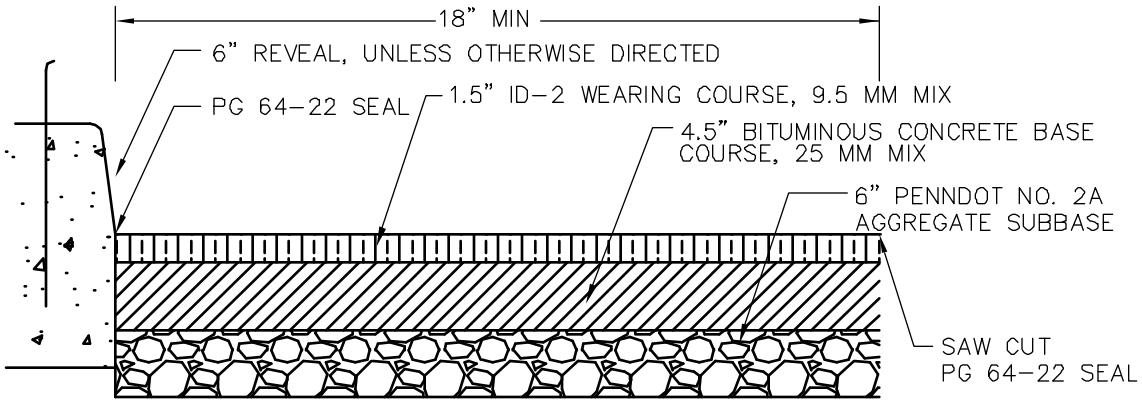

NOTES

1. ROADWAY RESTORATIONS SHALL BE PERFORMED ALONG STRAIGHT SAWCUT.
2. FAILURES IN THE EXISTING PAVEMENT MAY REQUIRE ANOTHER SAWCUT BE MADE IN ORDER TO INCORPORATE THE IRREGULARITIES INTO THE RESTORATION AREA.
3. ROADWAY RESTORATIONS SHALL INCLUDE AREAS FROM WHICH EXISTING PIPES, PLATES, BRICKS, CHANNELS, ETC. HAVE BEEN REMOVED.
4. ALL PRE-EXISTING PAVEMENT MARKING SHALL REPLACED IN-KIND.

GUTTER AND ROADWAY RESTORATION DETAIL

DETAIL - 2

TYPICAL DETAILS

BOROUGH OF CONSHOHOCKEN

MONTGOMERY COUNTY, PENNSYLVANIA

ADOPTED MAY 2009

LAST REVISED MARCH 2015

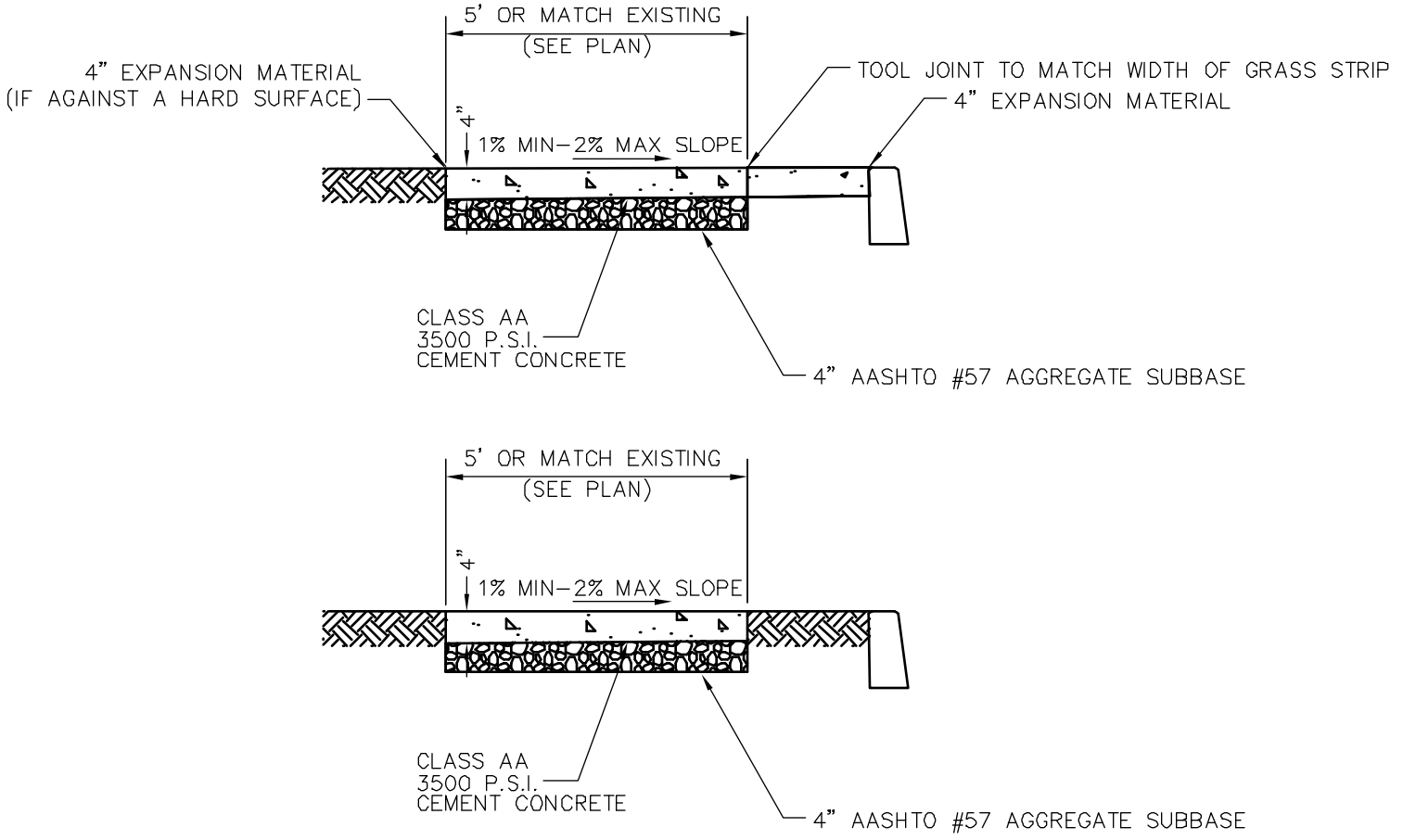

CEMENT CONCRETE SIDEWALK

N.T.S.

NOTE:

1. ALL CONCRETE IS TO BE CLASS AA, 3500 PSI
2. CONCRETE SIDEWALK SHALL BE SLOPED A MINIMUM OF 1.0% AND A MAXIMUM OF 2% TOWARDS THE TOP OF CURB.
3. CONTRACTOR SHALL PROVIDE EROSION CONTROLS TO CONTAIN OPEN EXCAVATIONS AND PROTECT THE NEAREST DOWNSTREAM INLET.
4. PROJECTS REQUIRING ONE (1.0) CUBIC YARD (CY) OR GREATER SHALL USE PLANT MIXED CONCRETE DELIVERED BY A CONCRETE MIXING TRANSPORT TRUCK. 1.0 CY OF CONCRETE YIELDS APPROXIMATELY 15 LINEAR FEET OF 5' WIDE SIDEWALK OR 20 LINEAR FEET OF 4' WIDE SIDEWALK.

DETAIL – 3

TYPICAL DETAILS

BOROUGH OF CONSHOHOCKEN

MONTGOMERY COUNTY, PENNSYLVANIA

ADOPTED MAY 2009

LAST REVISED MARCH 2015

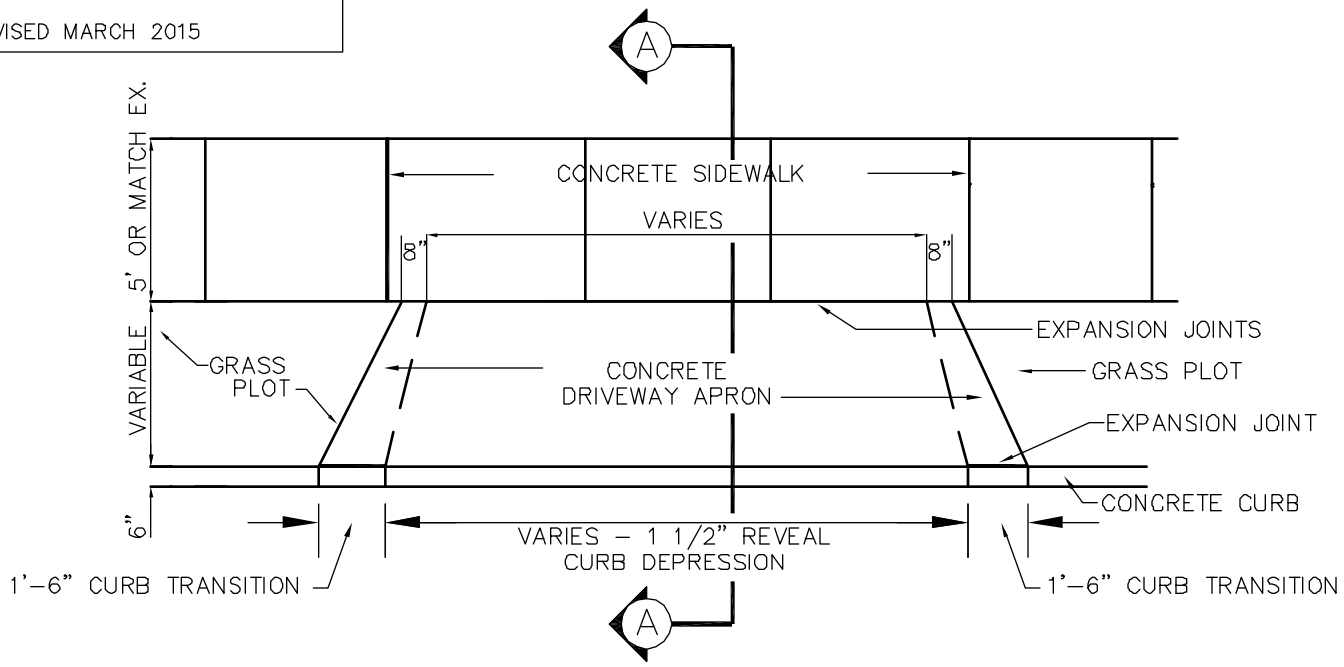

PLAN VIEW

N.T.S.

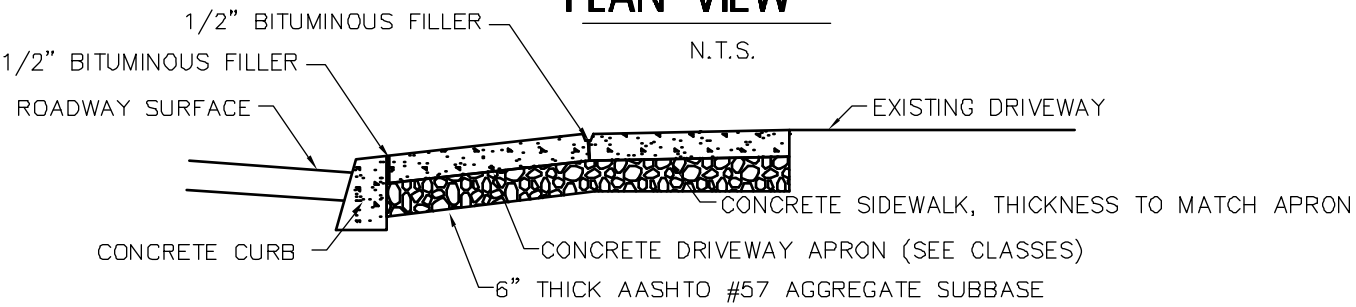

SECTION "A–A"

N.T.S.

DRIVEWAY APRON & CURB DEPRESSION

(APPLICABLE WITH STANDARD CURB)

N.T.S.

NOTES:

1. ALL CONCRETE IS TO BE CLASS AA, 3500 PSI
2. DEPRESSED CURB SHALL BE SLOPED 1/4" PER FOOT TOWARDS THE STREET.
3. CONCRETE SHALL BE ALLOWED TO CURE FOR SEVEN (7) DAYS.
4. USE OF "HIGH EARLY" CONCRETE MAY BE APPROVED BY THE BOROUGH INSPECTOR.
5. MONOLITHIC POURS SHALL ONLY BE PERMITTED BY SPECIAL EXCEPTION, AND ARE SUBJECT TO APPROVAL BY THE BOROUGH.
6. CONTRACTOR SHALL PROVIDE EROSION CONTROLS TO CONTAIN OPEN EXCAVATIONS AND PROTECT THE NEAREST DOWNSTREAM INLET.
7. PROJECTS REQUIRING ONE (1.0) CUBIC YARD (CY) OR GREATER SHALL USE PLANT MIXED CONCRETE DELIVERED BY A CONCRETE MIXING TRANSPORT TRUCK. 1.0 CY YIELDS APPROXIMATELY 54 SQUARE FEET OF 6" THICK APRON OR 40 SQUARE FEET OF 8" THICK APRON.

DRIVEWAY APRON CLASSES – MINIMUM STANDARDS:

1. RESIDENTIAL – 6" THICKNESS WITH 6X6–W1.4/W1.4 WIREMESH REINFORCEMENT
2. COMMERCIAL – 8" THICKNESS WITH 6X6–W2.1/W2.1 WIREMESH REINFORCEMENT
3. INDUSTRIAL – DESIGN TO BE PROVIDED TO BOROUGH ENGINEER.

*DETERMINATION OF CLASS SUBJECT TO APPROVAL BY THE BOROUGH.

DETAIL – 4

TYPICAL DETAILS

BOROUGH OF CONSHOHOCKEN

MONTGOMERY COUNTY, PENNSYLVANIA

G:\Drafting\Drafting\PA\CONSH\detail booklet aug 2007\DETAILS BOOKLET.dwg, 3/24/2015 10:14:24 AM, Adobe PDF 144dpi.pc3

ADOPTED MAY 2009

LAST REVISED MARCH 2015

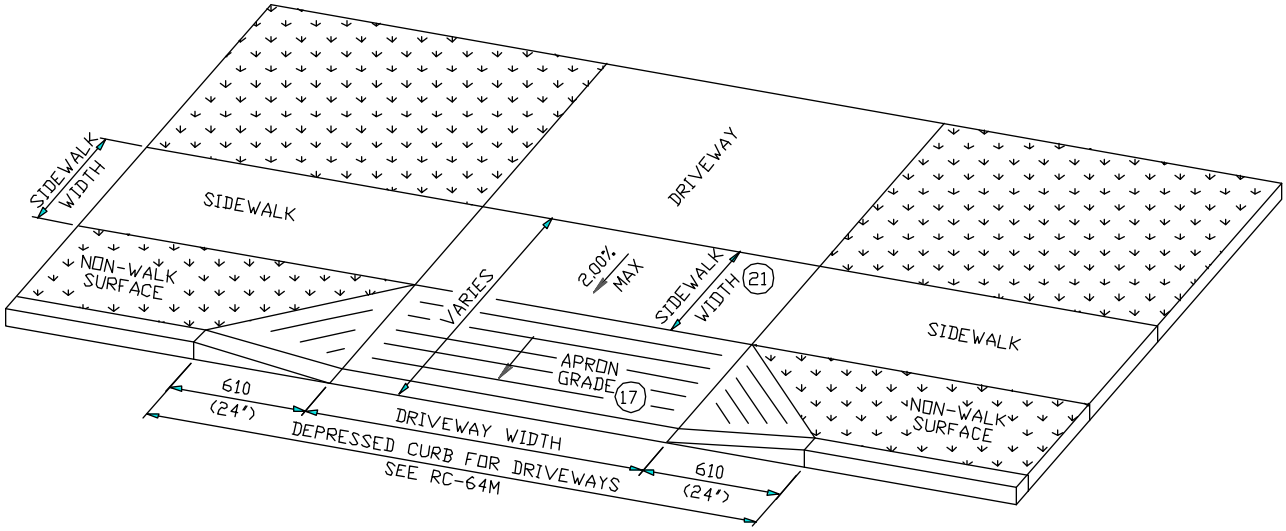

TYPE 1
DRIVEWAY APRON
N.T.S.

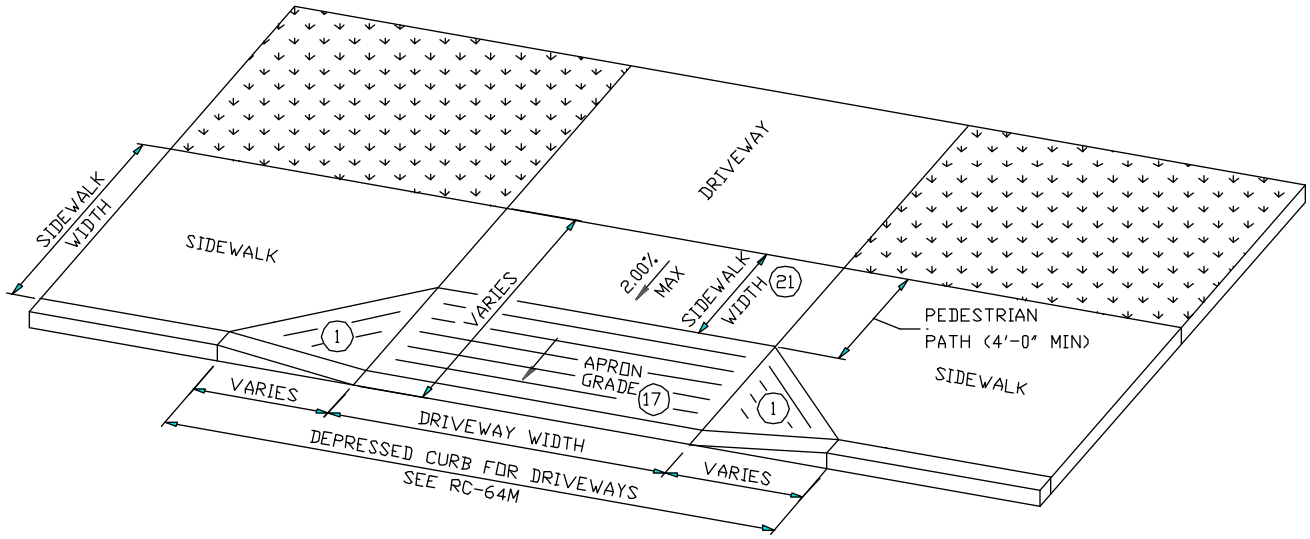

TYPE 1A
DRIVEWAY APRON
N.T.S.

(1) SIDE FLARES 10.00% MAX SLOPE

(17) 8% MAX CHANGE IN GRADE BETWEEN ROAD SURFACE AND DRIVEWAY

(21) MINIMUM SIDEWALK WIDTH 1525 (4'-0")

DETAIL - 5
TYPICAL DETAILS
BOROUGH OF CONSHOHOCKEN
MONTGOMERY COUNTY, PENNSYLVANIA

ADOPTED MAY 2009

LAST REVISED MARCH 2015

HANDICAPPED CURB RAMP NOTES

1. PROVIDE MATERIALS AND CONSTRUCTION MEETING THE REQUIREMENTS OF PUBLICATION 408, SECTIONS 350, 409, 630, 676 AND 694.
2. PROVIDE EXPANSION JOINT MATERIAL 13 (1/2") THICK WHERE CURB RAMP ADJOINS ANY RIGID PAVEMENT, SIDEWALK OR STRUCTURE WITH THE TOP OF JOINT FILLER FLUSH WITH ADJACENT CONCRETE SURFACE.
3. CONSTRUCT CURB RAMPS WITH A MINIMUM 1220 X 1220 (4'-0" X 4'-0") CLEAR SPACE BEYOND THE CURB FACE, WITHIN THE WIDTH OF THE CROSSWALK AND WHOLLY OUTSIDE THE PARALLEL VEHICLE TRAVEL LANE. SEE SHEET 7 FOR CROSSWALK DETAILS.
4. SEAL JOINTS WITH AN APPROVED SEALING MATERIAL.
5. PROVIDE SLIP RESISTANT TEXTURE ON CURB RAMP BY COARSE BROOMING TRANSVERSE TO THE SLOPE OF THE RAMP. EXTEND TEXTURE THE FULL WIDTH AND LENGTH OF THE CURB RAMP INCLUDING FLARED SIDE RAMPS.
6. MODIFY CONSTRUCTION DETAILS TO ADAPT DIMENSIONS TO EXISTING CURB HEIGHTS WHERE THE CURB IS LESS THAN THE STANDARD 205 (8") HEIGHT.
7. CURB RAMP AND SIDE FLARE LENGTHS ARE VARIABLE AND BASED ON CURB HEIGHT AND THE SIDEWALK SLOPE.
8. TO AVOID CHASING GRADE INDEFINITELY WHEN TRAVERSING THE HEIGHT OF CURB, RAMP LENGTH NOT TO EXCEED 4500 (15'-0"). ADJUST RAMP SLOPE AS NEEDED TO PROVIDE ACCESS TO THE MAXIMUM EXTENT FEASIBLE.
9. NON-WALK AREA IS AN OBSTRUCTED OR GRASS/NON-PAVED AREA ADJACENT TO THE PEDESTRIAN ACCESS ROUTE THAT IS NOT USED BY THE PEDESTRIAN FOR ACCESS.
10. THE DETAILS DEPICT PEDESTRIAN PUSHBUTTON POLES TO ILLUSTRATE THE RECOMMENDED PLACEMENT OF PEDESTRIAN PUSHBUTTONS. FOR ALTERATION PROJECTS, PROVIDE ACCESS TO EXISTING PEDESTRIAN PUSHBUTTONS TO THE MAXIMUM EXTENT FEASIBLE. INSTALL PEDESTRIAN PUSHBUTTON STUB POLES, WHERE APPLICABLE, SO AS NOT TO CREATE PEDESTRIAN OBSTRUCTIONS.
11. ALL DIMENSIONS ARE IN MILLIMETERS UNLESS OTHERWISE NOTED. US CUSTOMARY UNITS IN () PARENTHESIS.
12. ALIGN DETECTABLE WARNING SURFACE TRUNCATED DOMES ON A SQUARE GRID IN THE PREDOMINANT DIRECTION OF THE RAMP AND PERPENDICULAR TO CURB.
13. PROVIDE DETECTABLE WARNING SURFACES (DWS) 610 (24") MINIMUM (IN THE DIRECTION OF PEDESTRIAN TRAVEL) ACROSS FULL WIDTH OF RAMP AT THE GRADE BREAK NEAR STREET EDGE. PROVIDE DWS THAT CONTRAST VISUALLY WITH ADJACENT WALKWAY SURFACES, EITHER LIGHT-ON-DARK OR DARK-ON-LIGHT FOR THE FULL WIDTH OF RAMP.
14. FOR NEW CONSTRUCTION, DO NOT EXCEED 2.00% CROSS SLOPE ON THE CURB RAMP OR PEDESTRIAN ACCESSIBLE ROUTE.
15. FOR NEW CONSTRUCTION AND ALTERATIONS, CONSTRUCT CURB RAMP AND FLARE SLOPES WITH THE FLATTEST SLOPE POSSIBLE. THE SLOPES INDICATED IN THE DETAILS SHOW THE MAX SLOPE ALLOWABLE. SLOPES THAT EXCEED THOSE INDICATED IN THE DETAILS, OR CONTRACT DOCUMENTS AS APPLICABLE, WILL NOT BE ACCEPTED AND WILL BE RECONSTRUCTED.
16. CONSTRUCT SIDEWALKS AT A LONGITUDINAL SLOPE NOT TO EXCEED 5.00%. FOR ROADWAY PROFILE SLOPES THAT EXCEED 5.00%, CONSTRUCT PARALLEL SIDEWALKS ADJACENT TO ROADWAY AT A LONGITUDINAL SLOPE NOT TO EXCEED ROADWAY PROFILE SLOPE.
17. THE CHANGE IN GRADE AT THE BOTTOM OF THE CURB RAMP AND ADJOINING ROAD SURFACE IS NOT TO EXCEED AN ALGEBRAIC DIFFERENCE OF 11.00%. THE COUNTER SLOPE OF THE GUTTER OR ROAD AT THE FOOT OF A CURB RAMP, LANDING OR BLENDED TRANSITION IS NOT TO EXCEED 5.00%. SEE SHEET 8 FOR DETAILS.
18. THE CONSTRUCTION STANDARDS DEPICTED ARE MOST APPROPRIATE FOR NEW CONSTRUCTION. ALL CONSTRUCTION MUST MEET THE STANDARDS CONTAINED HEREIN UNLESS OTHERWISE NOTED OR DIRECTED.
19. ALL SLOPES ARE MEASURED WITH RESPECT TO A LEVEL PLANE. THEREFORE, THE LENGTH OF RAMP IS NOT SOLELY DEPENDANT ON THE HEIGHT OF CURB. (FOR EXAMPLE, A 150 (6") CURB DOES NOT NECESSARILY MEAN A RAMP LENGTH OF 1830 (6'-0") FOR A 12:1 (1:12) SLOPE.
20. SIDEWALK WIDTH MAY BE REDUCED TO 1220 (4'-0"), WHEN PASSING AREAS 1525 X 1525 (5'-0" X 5'-0") ARE PROVIDED EVERY 61 METERS (200').
21. THE TRAVEL LANE IS DEFINED BY THE OUTSIDE EDGE OF THE WHITE PAVEMENT MARKING LINE. IF A WHITE PAVEMENT MARKING LINE DOES NOT EXIST, THE TRAVEL LANE IS DEFINED BY THE CONTRACT DOCUMENTS.
22. CONSTRUCT DEPRESSED CURB FOR CURB RAMPS FLUSH TO ADJACENT ROADWAY. GRADE EDGE OF ROAD ELEVATIONS AT THE FLOW LINE TO ENSURE POSITIVE DRAINAGE AND PREVENT PONDING. FOR LEVEL LANDINGS BEHIND DEPRESSED CURB, ADJUST SLOPES TO PROVIDE POSITIVE DRAINAGE.
23. CHEEK WALLS ARE PERMITTED WHEN ADJACENT TO NON-WALK AREAS OR ELEVATION DIFFERENCES CANNOT BE ACCOMMODATED BY FLARES OR GRADING. GRADE GRASS AREAS OR OTHER NON-WALK AREAS AT 3:1 (1:3) MAXIMUM. DO NOT INSTALL CHEEK WALLS THAT INTERSECT THE PEDESTRIAN ACCESS ROUTE.
24. CONSTRUCT TOP OF PLAIN CEMENT CONCRETE DEPRESSED CURB TO BE FLUSH WITH ADJACENT SURFACES (RAMPS, SIDEWALKS, FLARES).
25. FOR CURB RAMPS THAT LEAD TO A SINGLE CROSSWALK, THE RAMP (EXCLUDING FLARES) TO BE FULLY INSIDE OF MARKED CROSSWALK LINES. SEE SHEET 7 FOR DETAILS.
26. A 1220 (4'-0") MAXIMUM DIGITAL DISPLAY LEVEL WILL BE USED TO VERIFY THE SLOPES OF CURB RAMPS AND SIDEWALKS.
27. DETECTABLE WARNING SURFACES SHALL BE CAST-IN-PLACE POLYMER COMPOSITE BY "ARMOR-TILE" AS MANUFACTURED BY ENGINEERED PLASTICS INC., OR APPROVED EQUAL. FEDERAL COLOR NUMBER 22144.

DETAIL – 6

TYPICAL DETAILS

BOROUGH OF CONSHOHOCKEN

MONTGOMERY COUNTY, PENNSYLVANIA

ADOPTED MAY 2009

LAST REVISED MARCH 2015

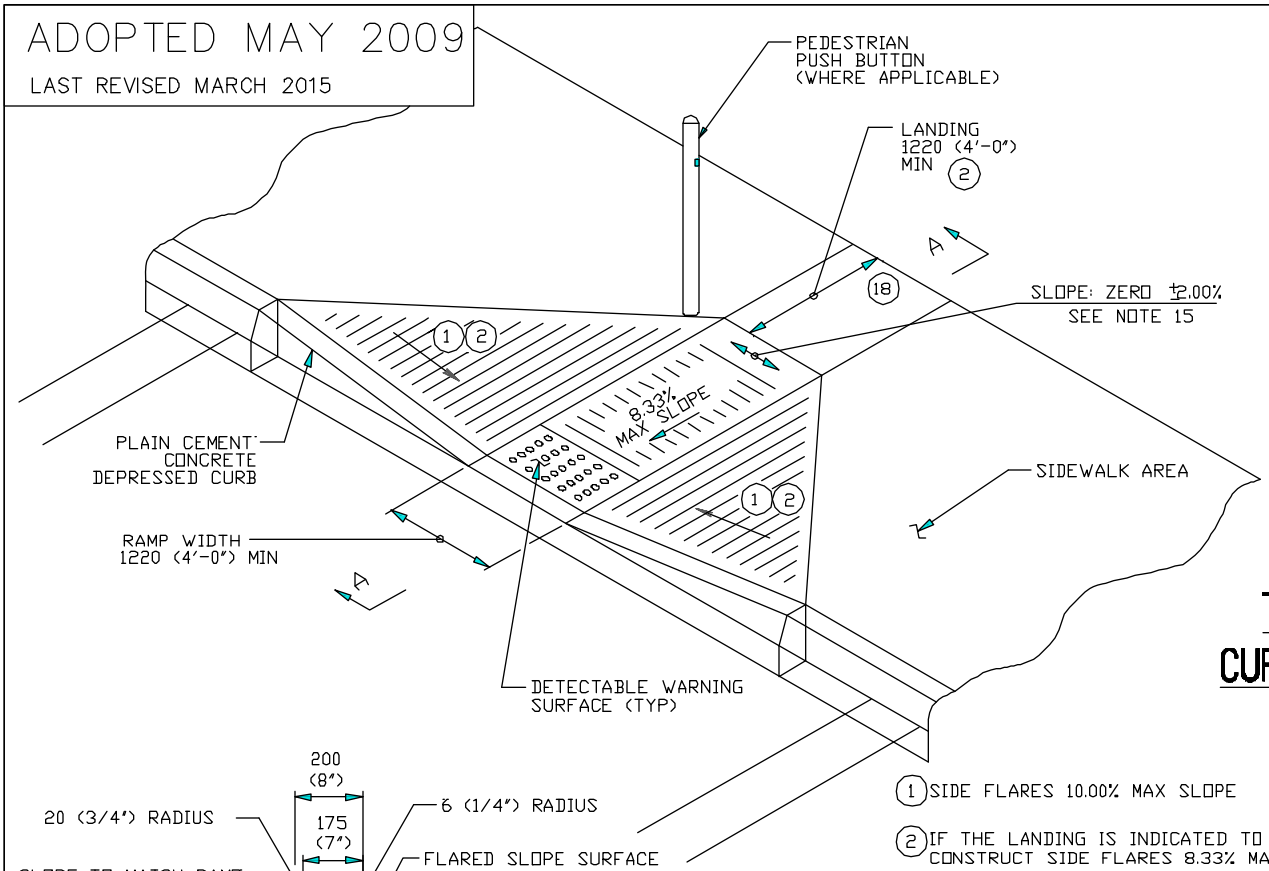

TYPE 1 CURB RAMP

N.T.S.

(1) SIDE FLARES 10.00% MAX SLOPE

(2) IF THE LANDING IS INDICATED TO BE LESS THAN 1220 (4'-0"), CONSTRUCT SIDE FLARES 8.33% MAX. SLOPE.

(18) CURB RAMPS REQUIRE A 1220 (4'-0") MINIMUM LANDING WITH A MAXIMUM SLOPE OF 2.00% IN ALL DIRECTIONS WHERE PEDESTRIANS PERFORM TURNING MANEUVERS. SEE DETAILS FOR LOCATIONS.

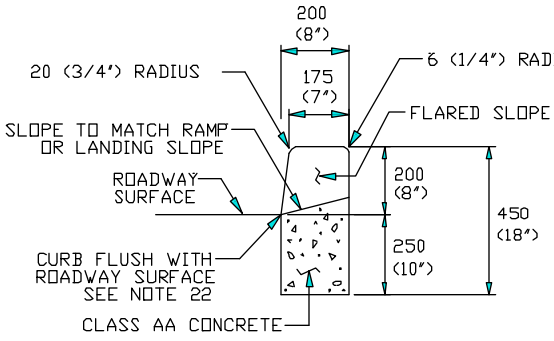

DEPRESSED CURB SECTION B-B

N.T.S.

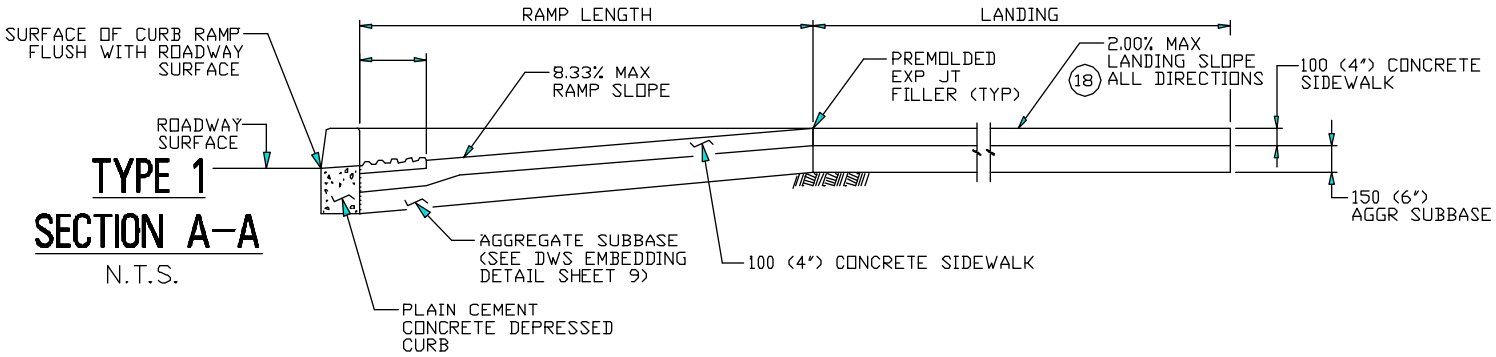

TYPE 1 SECTION A-A

N.T.S.

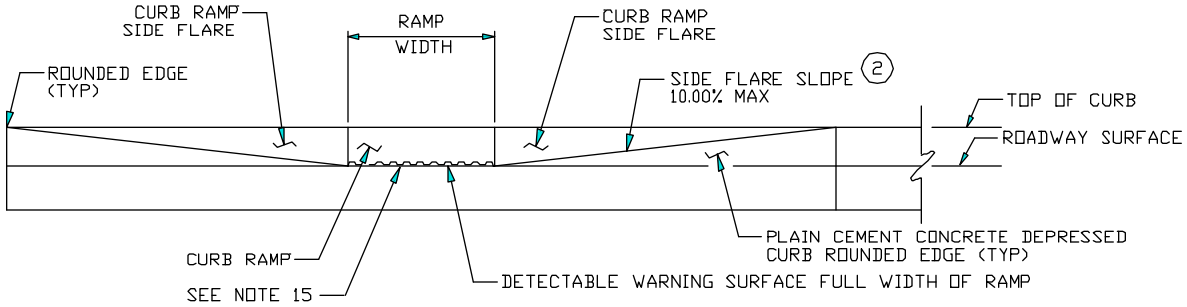

TYPE 1 ELEVATION

N.T.S.

DETAIL - 7

TYPICAL DETAILS

BOROUGH OF CONSHOHOCKEN

MONTGOMERY COUNTY, PENNSYLVANIA

G:\Drafting\Drafting\PA\CONSH\detail booklet aug 2007\DETAILS BOOKLET.dwg, 3/24/2015 10:17:54 AM, Adobe PDF 144dpi.pcs

ADOPTED MAY 2009

LAST REVISED MARCH 2015

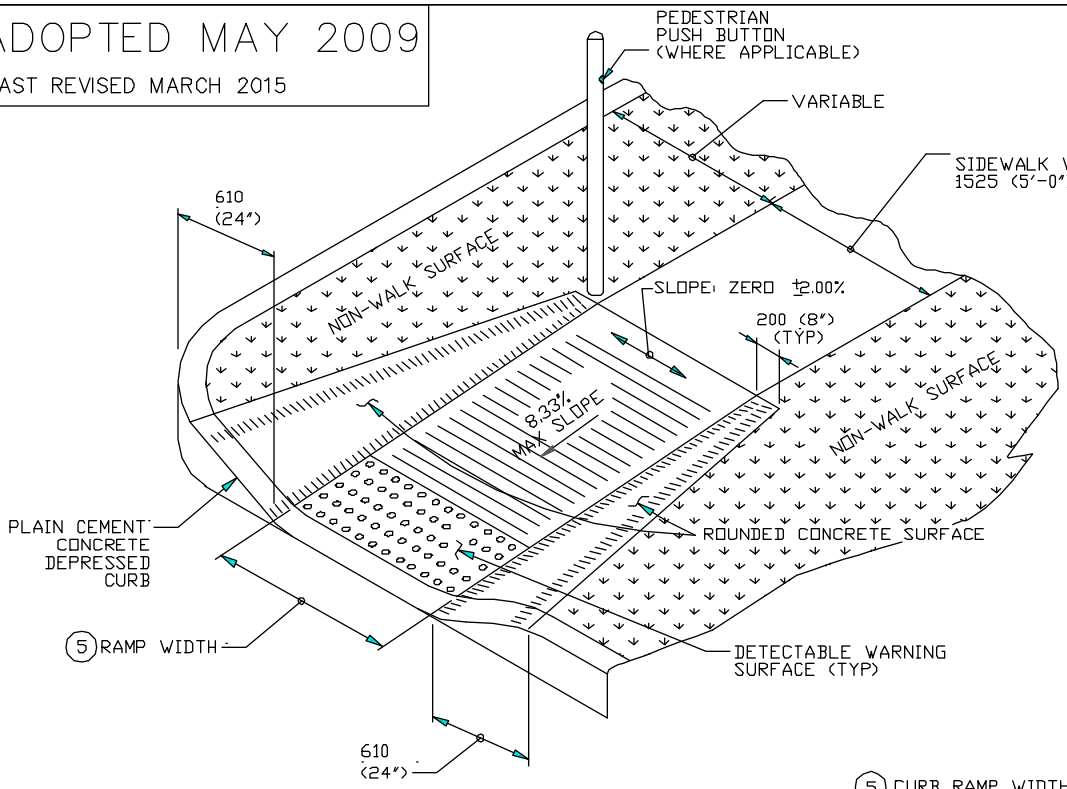

TYPE 4A CURB RAMP (PARALLEL)

N.T.S.

(5) CURB RAMP WIDTH IS EQUAL TO SIDEWALK WIDTH WHEN THE SIDEWALK WIDTH IS GREATER THAN OR EQUAL TO 1220 (4'-0").

(18) CURB RAMPS REQUIRE A 1220 (4'-0") MINIMUM LANDING WITH A MAXIMUM SLOPE OF 2.00% IN ALL DIRECTIONS WHERE PEDESTRIANS PERFORM TURNING MANEUVERS. SEE DETAILS FOR LOCATIONS.

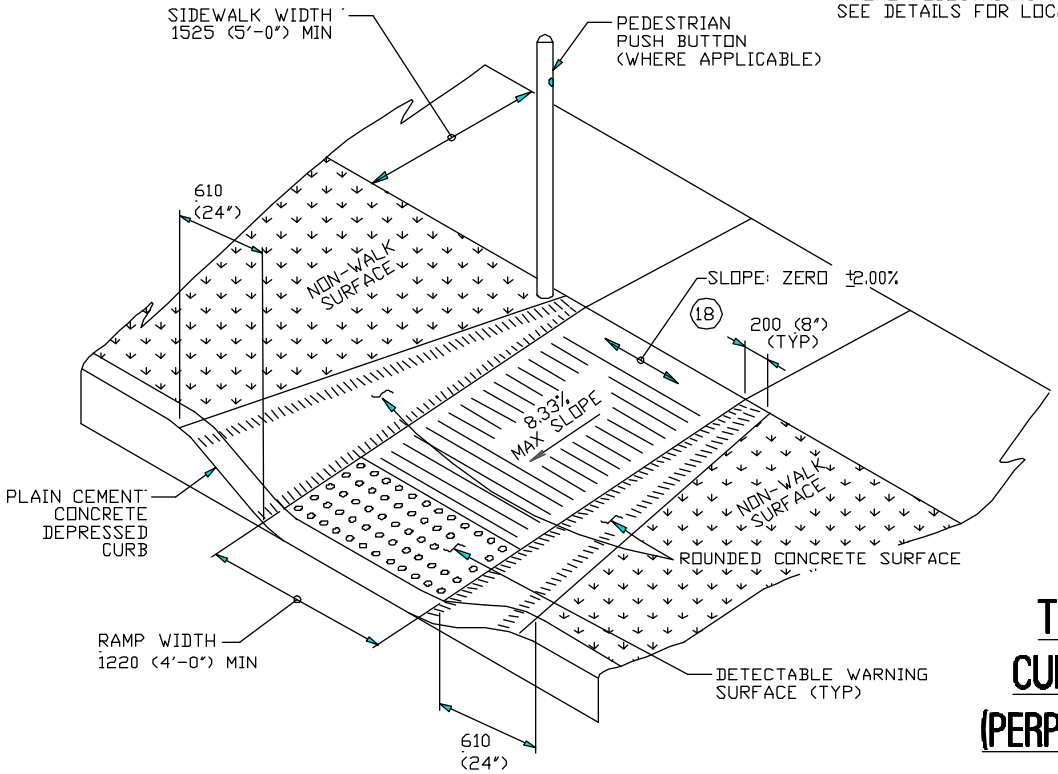

TYPE 4A CURB RAMP (PERPENDICULAR)

N.T.S.

DETAIL - 8

TYPICAL DETAILS

BOROUGH OF CONSHOHOCKEN

MONTGOMERY COUNTY, PENNSYLVANIA

ADOPTED MAY 2009

LAST REVISED MARCH 2015

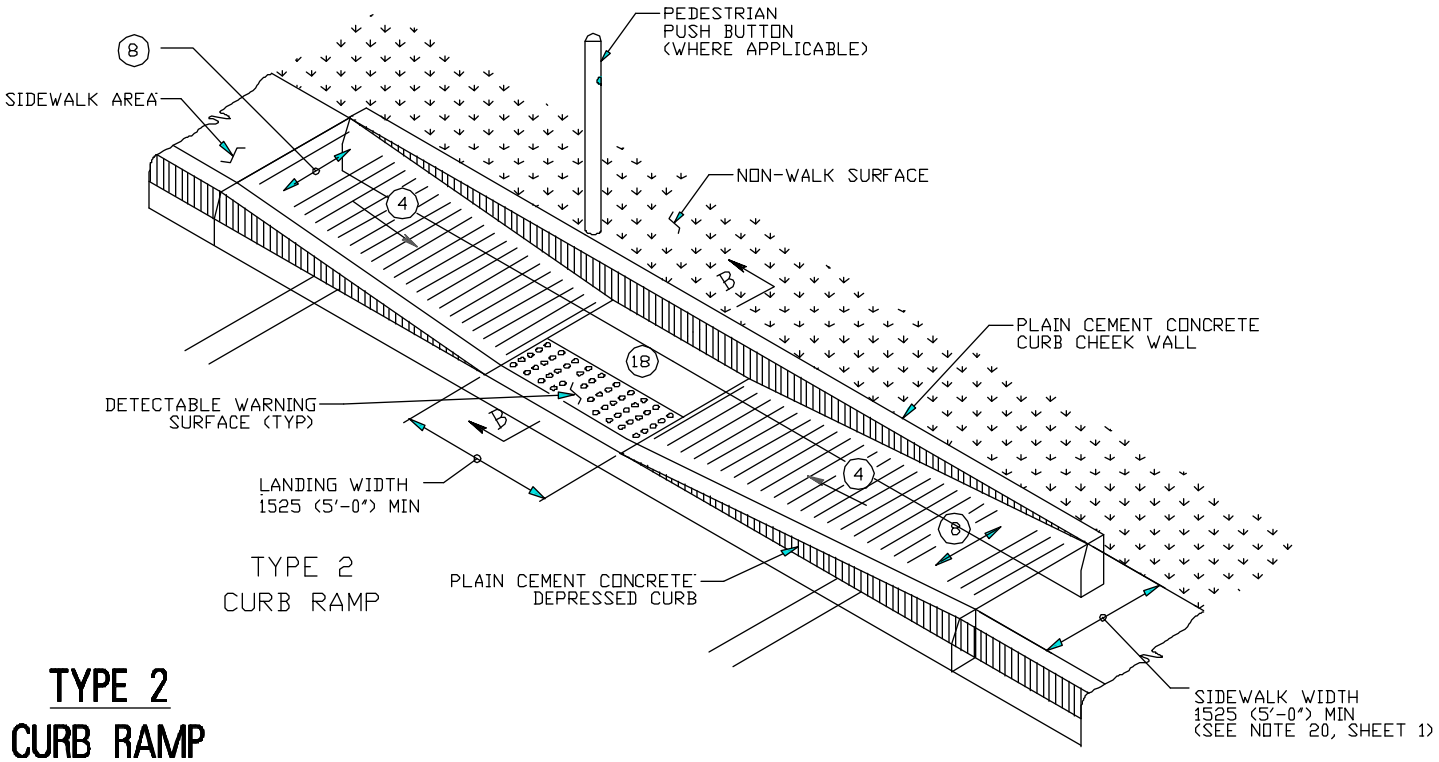

TYPE 2 CURB RAMP

N.T.S.

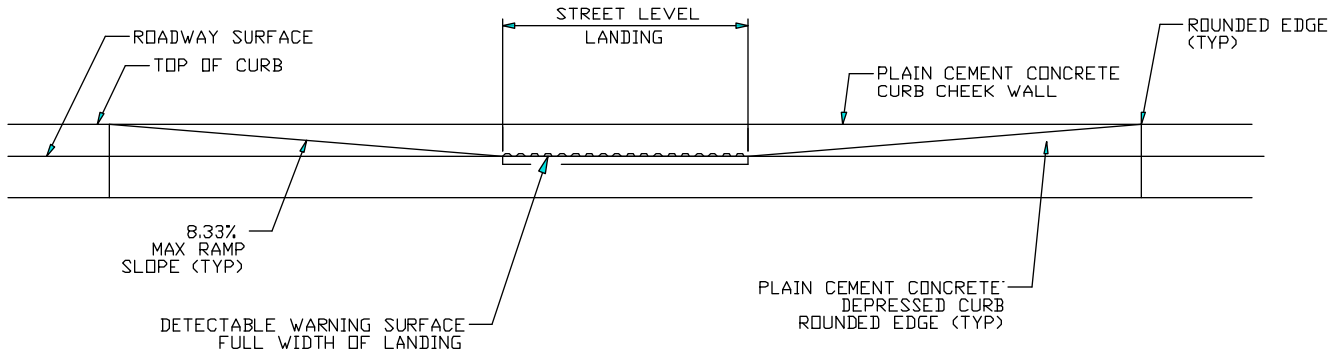

TYPE 2 ELEVATION

N.T.S.

(1) SIDE FLARES 10.00% MAX SLOPE

(4) 8.33% MAX RAMP SLOPE

(8) SLOPE: ZERO ±2.00%

(18) CURB RAMPS REQUIRE A 1220 (4'-0") MINIMUM LANDING WITH A MAXIMUM SLOPE OF 2.00% IN ALL DIRECTIONS WHERE PEDESTRIANS PERFORM TURNING MANEUVERS. SEE DETAILS FOR LOCATIONS.

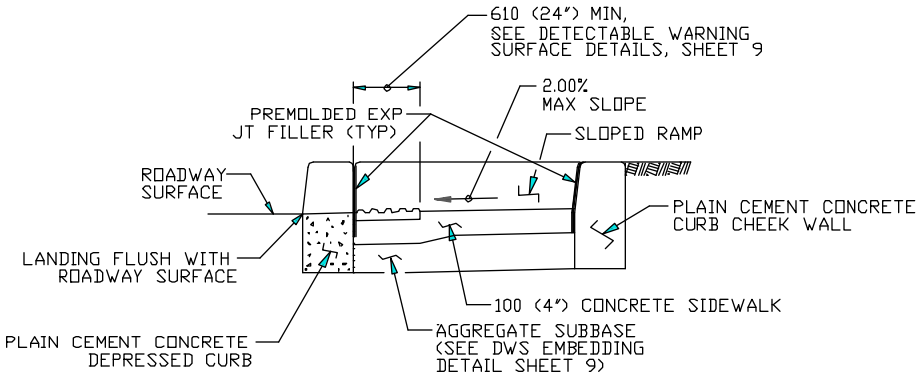

TYPE 2 SECTION B-B

N.T.S.

DETAIL - 9

TYPICAL DETAILS

BOROUGH OF CONSHOHOCKEN

MONTGOMERY COUNTY, PENNSYLVANIA

ADOPTED MAY 2009

LAST REVISED MAY 2012

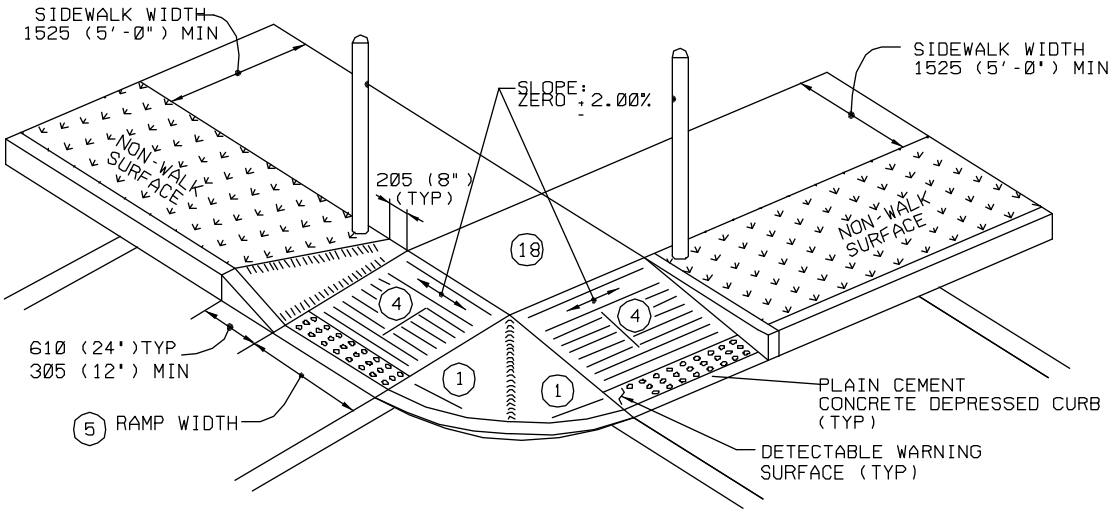

TYPE 4/4A CURB RAMPS
WITH SHARED LANDING

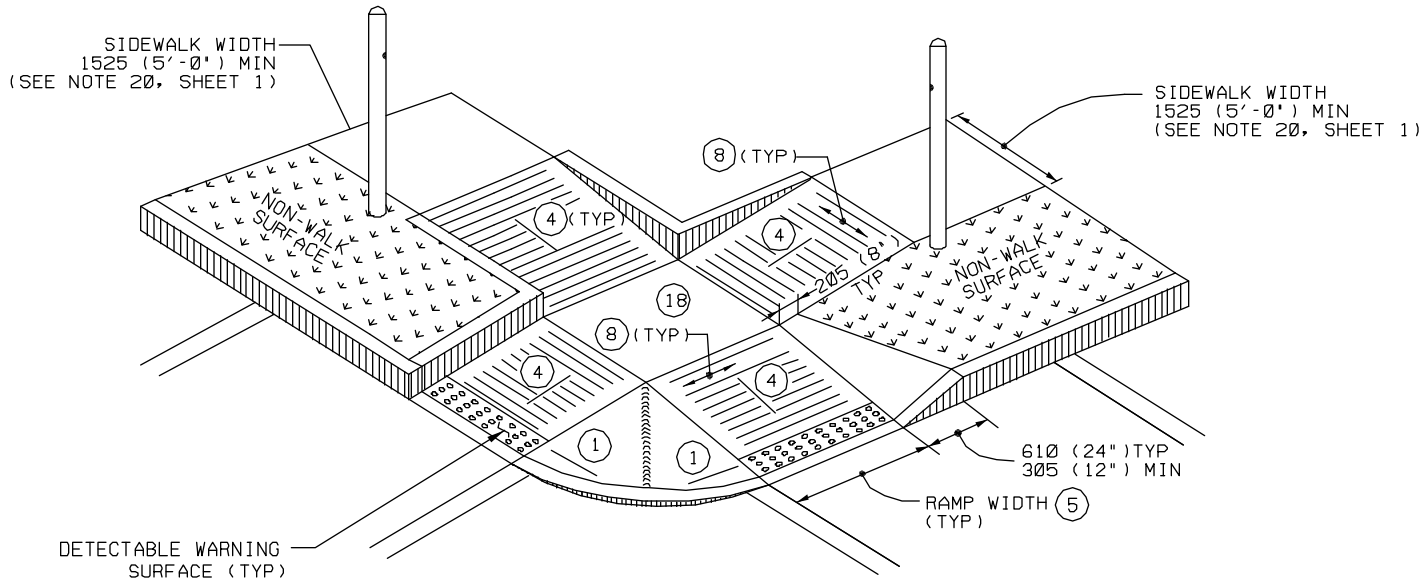

TYPE 6 CURB RAMPS
WITH SHARED LANDING

(1) SIDE FLARES 10.00% MAX SLOPE

(4) 8.33% MAX RAMP SLOPE

(5) CURB RAMP WIDTH IS EQUAL TO SIDEWALK WIDTH WHEN THE SIDEWALK WIDTH IS GREATER THAN OR EQUAL TO 1220 (4'-Ø').

(8) SLOPE: ZERO +/- 2.00%

(18) CURB RAMPS REQUIRE A 1220 (4'-Ø")MINIMUM LANDING WITH A MAXIMUM CROSS SLOPE AND LONGITUDINAL SLOPE OF 2.00% WHERE PEDESTRIANS PERFORM TURNING MANEUVERS. SEE DETAILS FOR LOCATIONS AND DIMENSIONS.

DETAIL - 10
TYPICAL DETAILS
BOROUGH OF CONSHOHOCKEN
MONTGOMERY COUNTY, PENNSYLVANIA

ADOPTED MAY 2009

LAST REVISED MARCH 2015

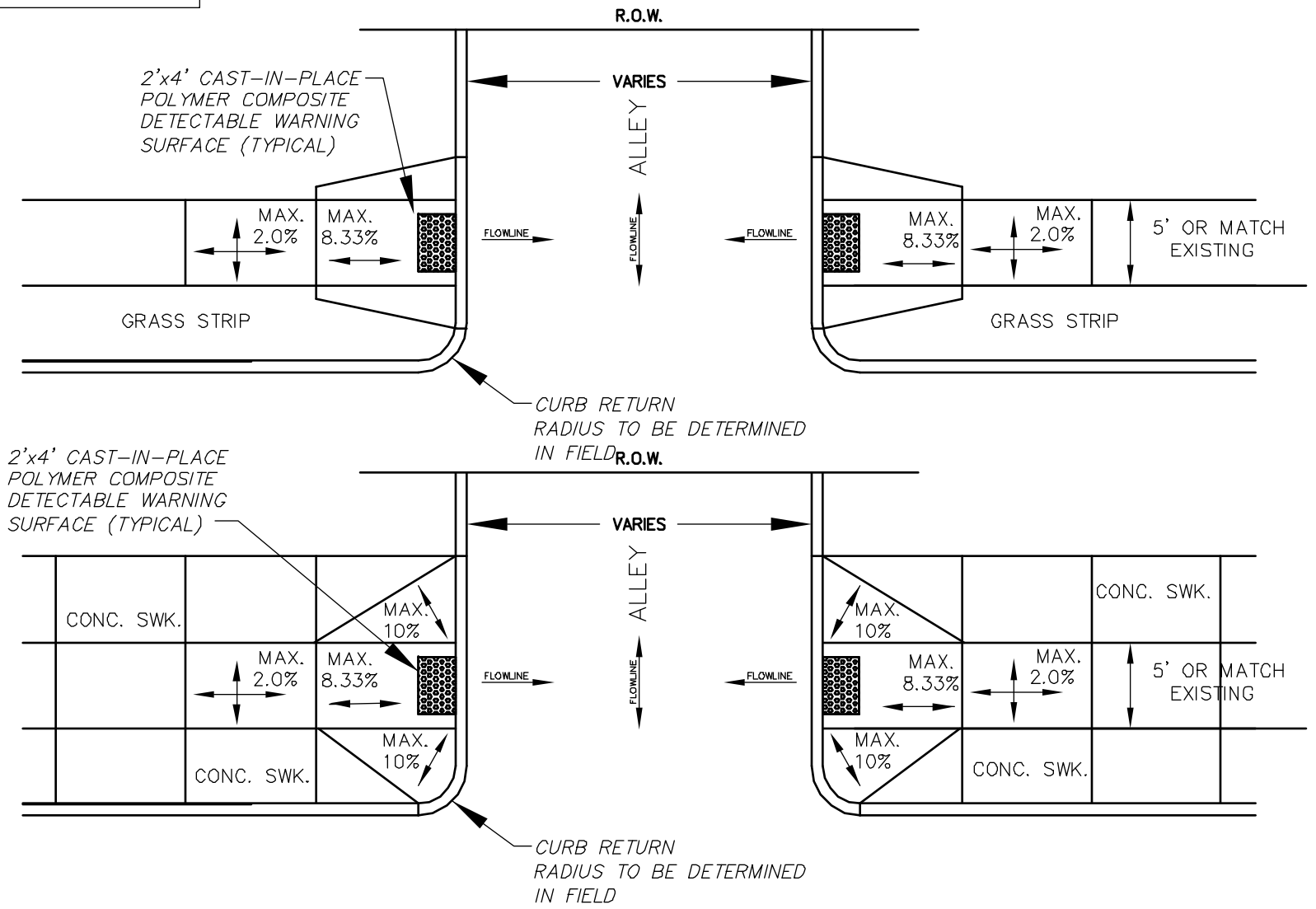

NOTES:

1. CONDITION OF EXISTING CURB, SIDEWALK AND ALLEY SHALL BE INSPECTED BY THE BOROUGH INSPECTOR, AND A DETERMINATION WILL BE MADE AS TO THE EXTENT OF REPLACEMENT REQUIRED.

2. CONCRETE CURB SHALL BE INSTALLED WHERE NO CURB EXISTS CURRENTLY. CURB RETURNS SHALL BE INSTALLED TO THE RIGHT-OF-WAY LINE.

3. THE ALLEY SHALL BE RESTORED AS DIRECTED BY THE BOROUGH INSPECTOR. ALLEY RESTORATIONS WITHIN THE RIGHT-OF-WAY OF THE ADJOINING BOROUGH STREET SHALL BE IN ACCORDANCE WITH BOROUGH STREET RESTORATION STANDARDS.

ALLEY INTERSECTION WITH BOROUGH STREET DETAIL

N.T.S.

DETAIL - 11

TYPICAL DETAILS
BOROUGH OF CONSHOHOCKEN
MONTGOMERY COUNTY, PENNSYLVANIA

G:\Drafting\Drafting\PA\CONSH\detail booklet aug 2007\DETAILS BOOKLET.dwg, 3/24/2015 10:20:20 AM, Adobe PDF 144dpi.pc3

ADOPTED MAY 2009

LAST REVISED MARCH 2015

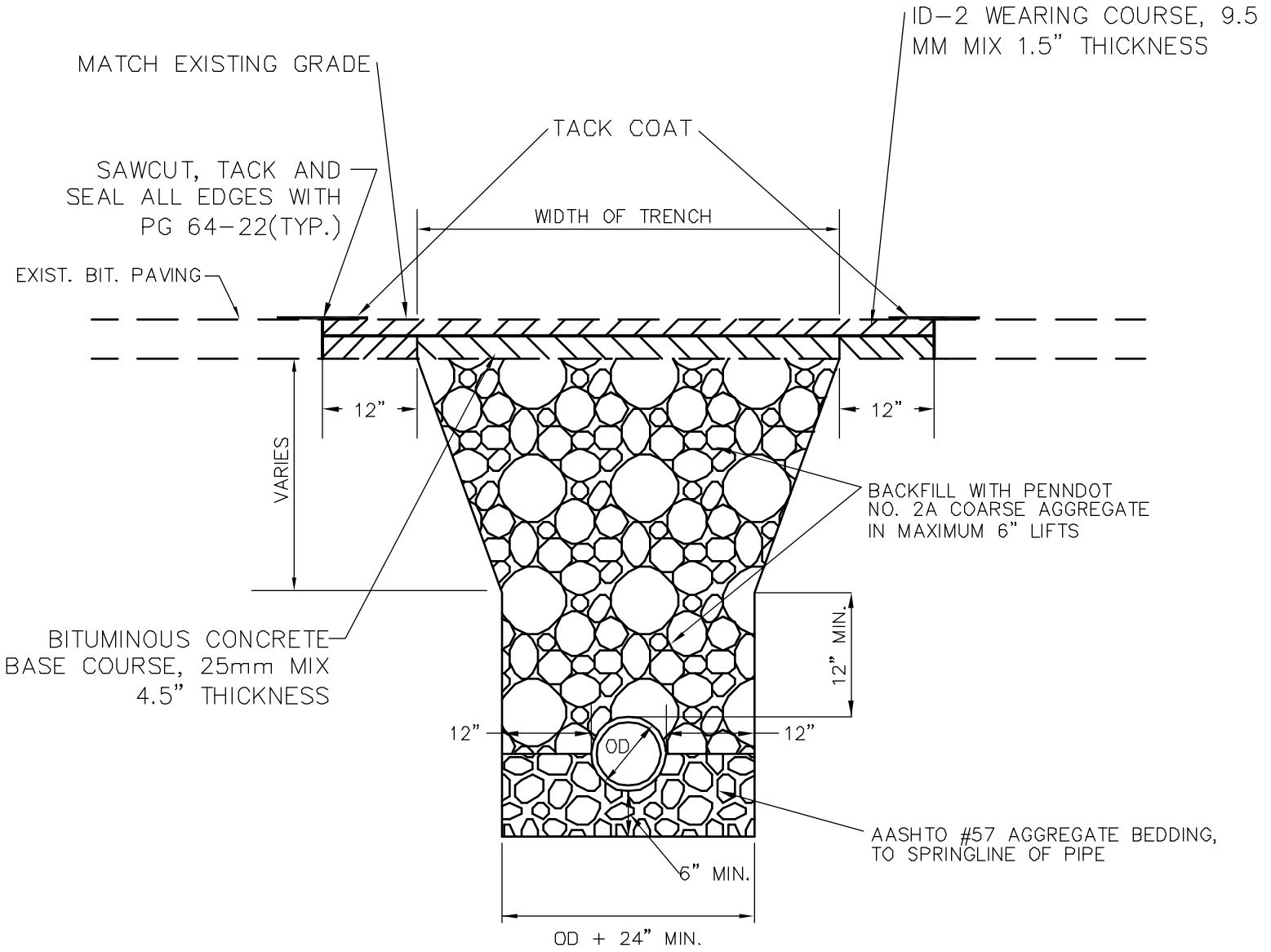

PARALLEL ROADWAY TRENCH AND PAVEMENT RESTORATION DETAIL (BITUMINOUS CONCRETE)

N.T.S.

NOTE:

1. THE CONTRACTOR SHALL MAKE EVERY EFFORT TO MINIMIZE WIDTH OF TRENCH.
2. FOR UTILITY LATERAL TRENCH RESTORATION SEE DETAIL-13
3. RESTORATIONS ON STATE HIGHWAYS REQUIRE PENNDOT APPROVAL.
4. TRENCHES SHALL BE PUMPED THROUGH A FILTER BAG WHEN DEWATERING.
5. THE CONTRACTOR IS SOLELY RESPONSIBLE FOR TRENCH SAFEY.

SPECIAL NOTE:

1. SEE DETAIL 15 FOR RESURFACING REQUIREMENTS FOR MAIN TRENCHES.
2. SEE DETAIL 16 FOR THE LATERAL AND SERVICE TRENCH DETAIL.

DETAIL - 12

TYPICAL DETAILS

BOROUGH OF CONSHOHOCKEN

MONTGOMERY COUNTY, PENNSYLVANIA

ADOPTED MAY 2009

LAST REVISED MAY 2012

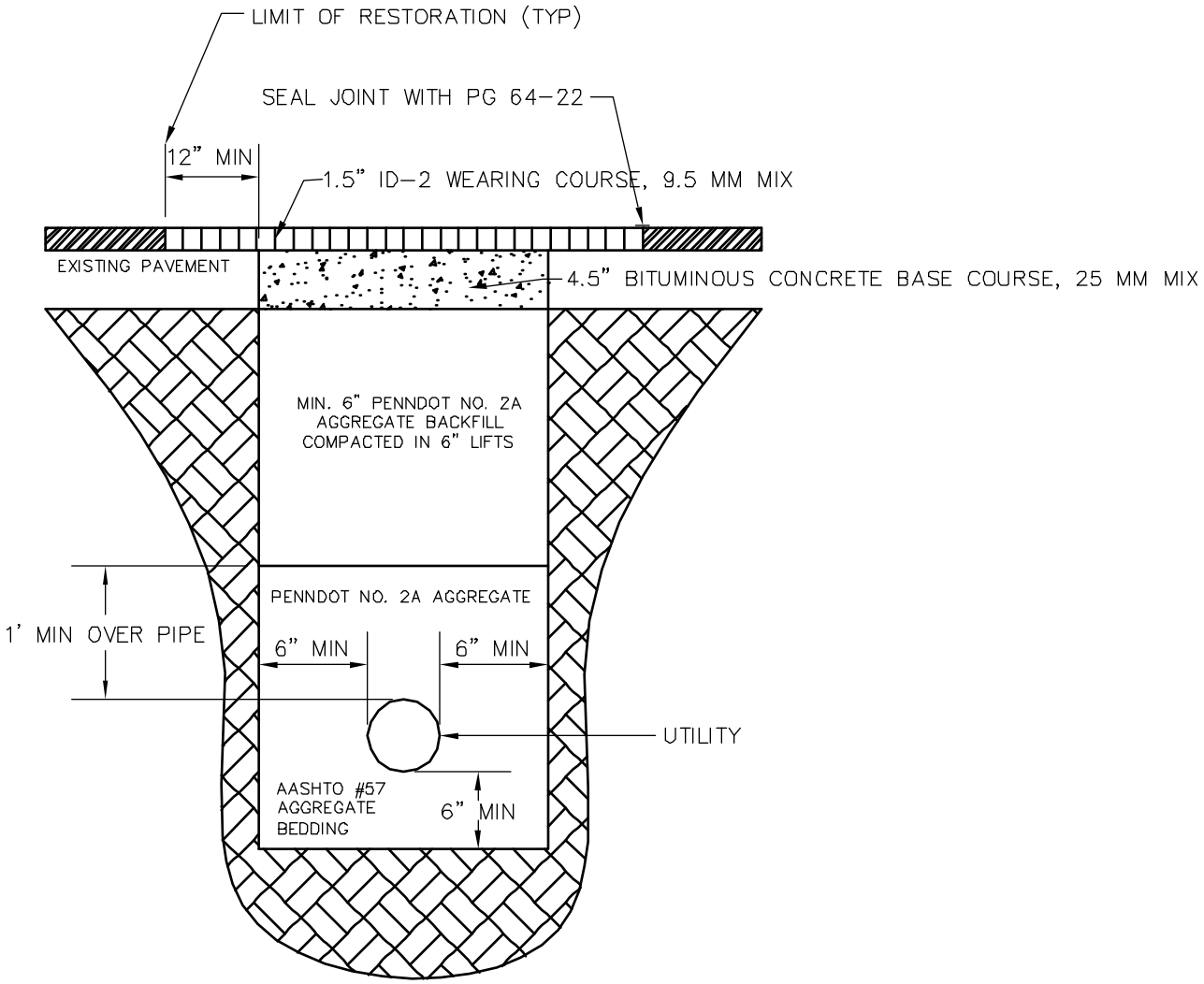

UTILITY LATERAL TRENCH RESTORATION

(PERPENDICULAR TO ROADWAY)

N.T.S.

NOTE:

1. THE CONTRACTOR SHALL MAKE EVERY EFFORT TO MINIMIZE WIDTH OF TRENCH.
2. FOR UTILITY MAIN TRENCH RESTORATION SEE DETAIL-12
3. RESTORATIONS ON STATE HIGHWAYS REQUIRE PENNDOT APPROVAL.
4. TRENCHES SHALL BE PUMPED THROUGH A FILTER BAG WHEN DEWATERING.
5. THE CONTRACTOR IS SOLEY RESPONSIBLE FOR TRENCH SAFETY.
6. ALL LATERAL TRENCHES SHALL BE REPAIRED USING AN INFRARED SEAMLESS REPAIR METHOD.

SPECIAL NOTE:

1. UTILITY PATCHES WITHIN FIVE (5) FEET OF OTHER UTILITY PATCHES SHALL BE JOINED IN ORDER TO LIMIT THE NUMBER OF JOINTS IN THE PAVEMENT. THE PAVEMENT INTERFACE WITH THE CURB IS CONSIDERED A JOINT. PATCHES WITHIN FIVE (5) OF THE CURB SHALL BE EXTENDED TO THE CURB.

DETAIL - 13

TYPICAL DETAILS

BOROUGH OF CONSHOHOCKEN

MONTGOMERY COUNTY, PENNSYLVANIA

ADOPTED MAY 2009

LAST REVISED MARCH 2015

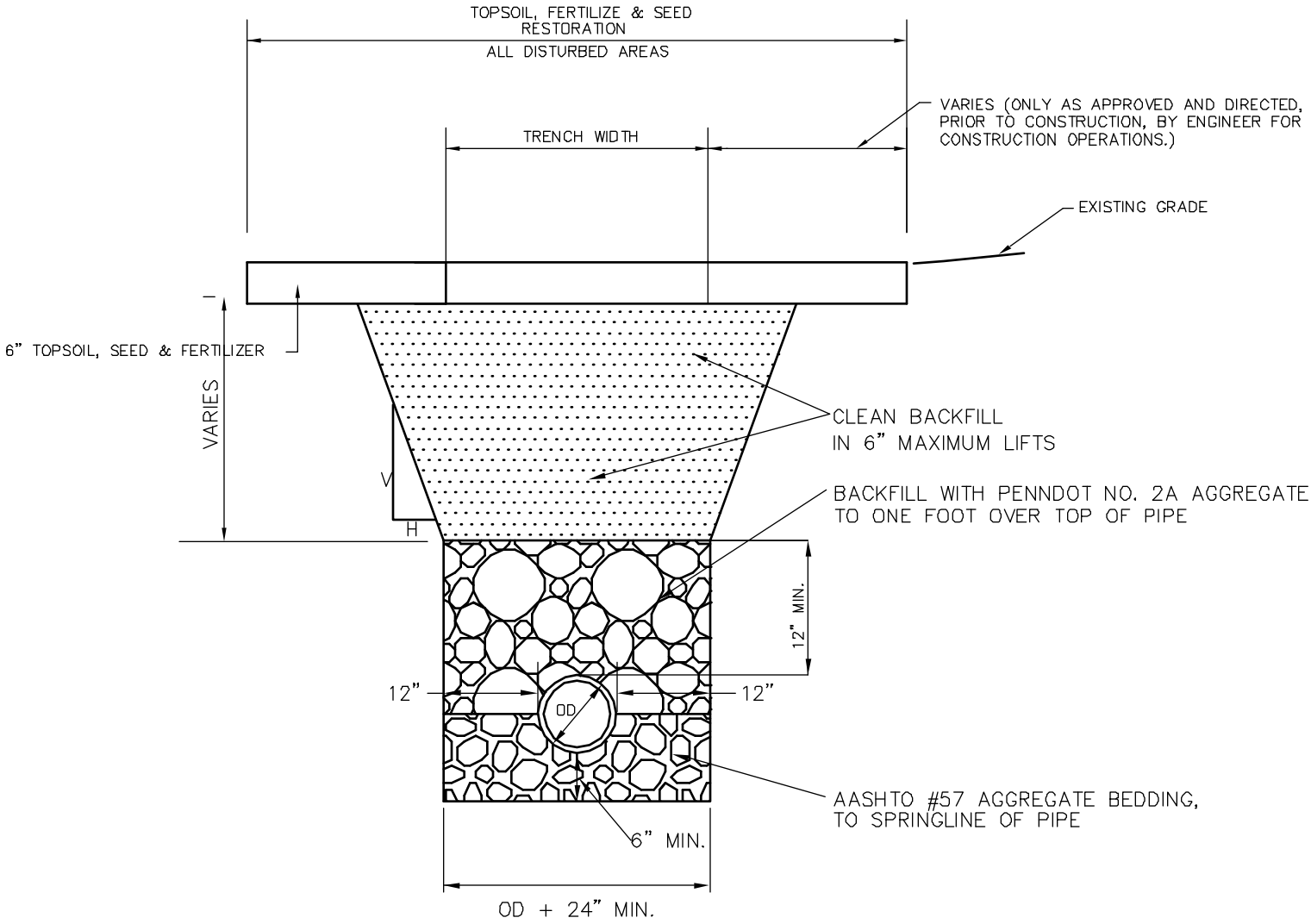

TYPICAL TRENCH DETAIL FOR GRASSED AREA

N.T.S.

NOTE:

1. THE CONTRACTOR SHALL MAKE EVERY EFFORT TO MINIMIZE WIDTH OF TRENCH.
2. TRENCHES SHALL BE PUMPED THROUGH A FILTER BAG WHEN DEWATERING.
3. THE CONTRACTOR IS SOLELY RESPONSIBLE FOR TRENCH SAFETY.

DETAIL - 14

TYPICAL DETAILS

BOROUGH OF CONSHOHOCKEN

MONTGOMERY COUNTY, PENNSYLVANIA

ADOPTED MAY 2009

LAST REVISED MARCH 2015

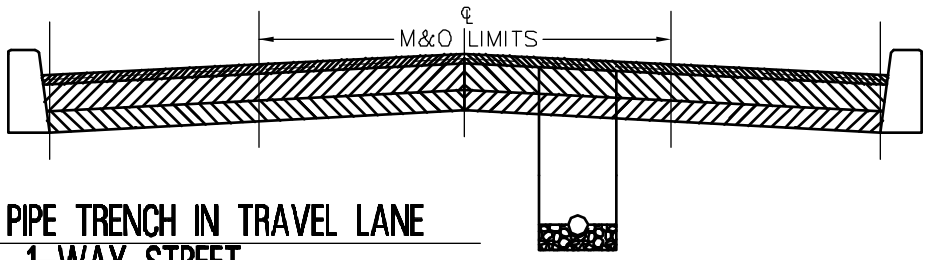

PIPE TRENCH IN TRAVEL LANE
1-WAY STREET

N.T.S.

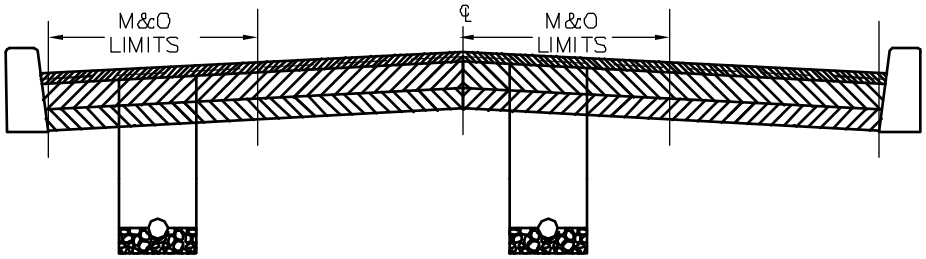

PIPE TRENCH IN PARKING LANE, TRAVEL LANE OR ORIGINAL PAVING PASS
2-WAY STREET

N.T.S.

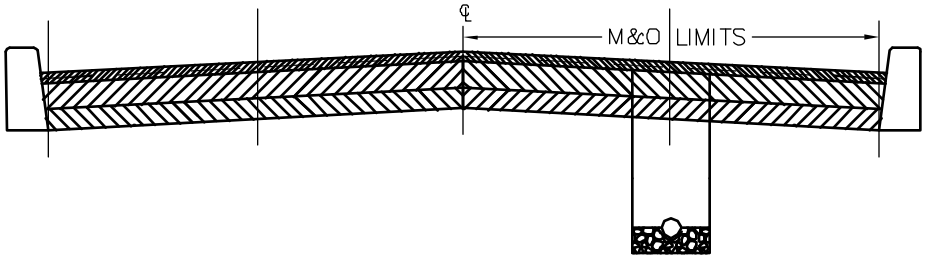

PIPE TRENCH AFFECTING 2 LANES OR ORIGINAL PAVING PASSES
2-WAY STREET

N.T.S.

NOTES:

1. UTILITY MAIN REPAIRS OR REPLACEMENTS WILL REQUIRE COMPLETE MILL AND OVERLAY OF THE PARKING LANE, TRAVEL LANE OR ORIGINAL PAVING PASS IN WHICH THE REPAIR FALLS. MAIN REPAIRS OR REPLACEMENTS WHICH REQUIRE TRENCHING ACROSS TWO (2) TRAVEL LANES, A TRAVEL LANE AND A PARKING LANE, OR ACROSS TWO ORIGINAL PAVING PASSES WILL REQUIRE COMPLETE MILL AND OVERLAY OF THE TRAVEL LANE(S) AND/OR PARKING LANE(S) AFFECTED.

2. THE EXACT LIMITS OF PAVING SHALL BE DETERMINED IN THE FIELD. THE BOROUGH RESERVES THE RIGHT TO ADJUST THE PAVING LIMITS IN ORDER TO MATCH THE SEAMS FROM THE ORIGINAL PAVING OPERATION OR OTHERWISE TO PRESERVE TO THE INTEGRITY OF THE ROAD TO THE GREATEST EXTENT PRACTICAL.

3. PAVING LIMITS SHALL BE EXPANDED TO INCLUDE ALL DISTURBANCE FROM LATERAL OF SERVICE INSTALLATIONS

4. THE CONTRACTOR SHALL BE RESPONSIBLE FOR THE REPLACEMENT OF ALL PAVEMENT MARKINGS REMOVED BY THE UTILITY CONSTRUCTION.

STREET DEGRADATION RESURFACING DETAILS

N.T.S.

DETAIL – 15

TYPICAL DETAILS
BOROUGH OF CONSHOHOCKEN
MONTGOMERY COUNTY, PENNSYLVANIA

ADOPTED MAY 2009

LAST REVISED MARCH 2015

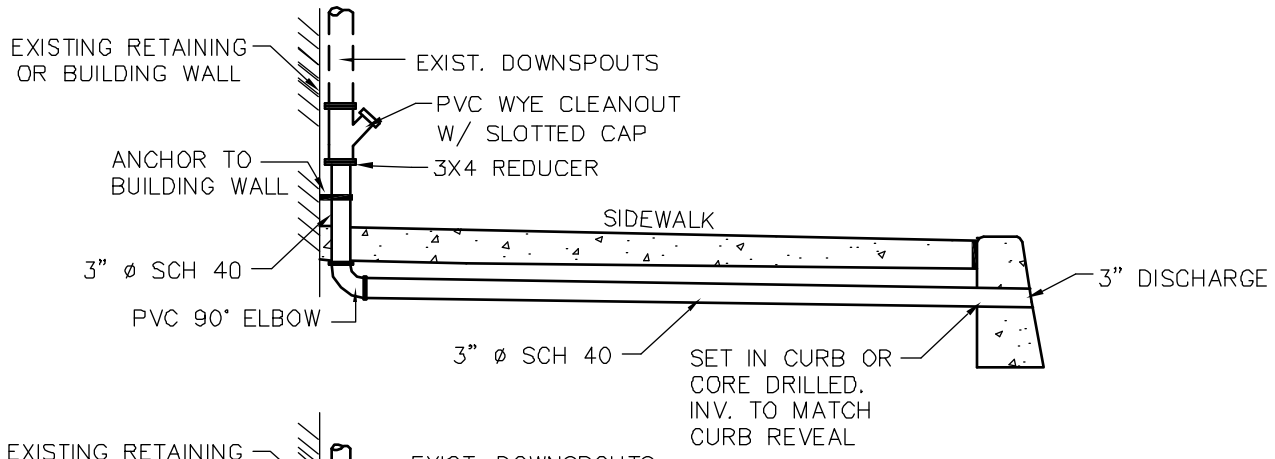

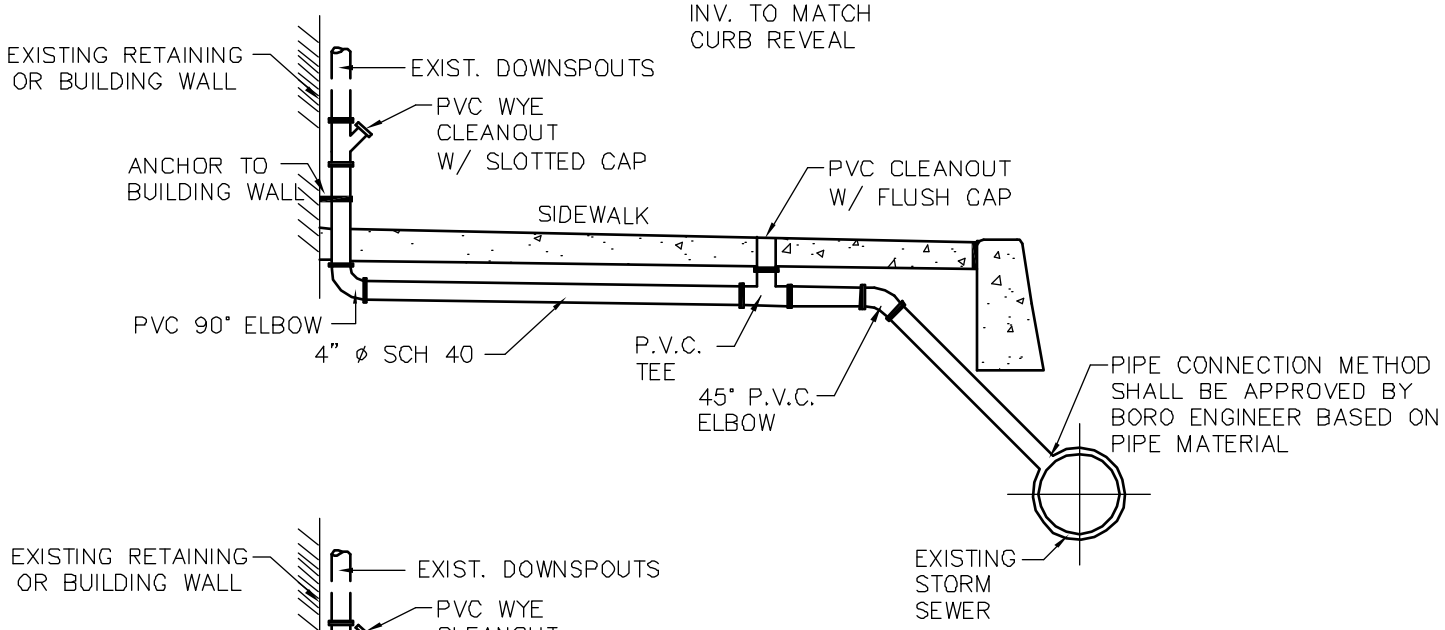

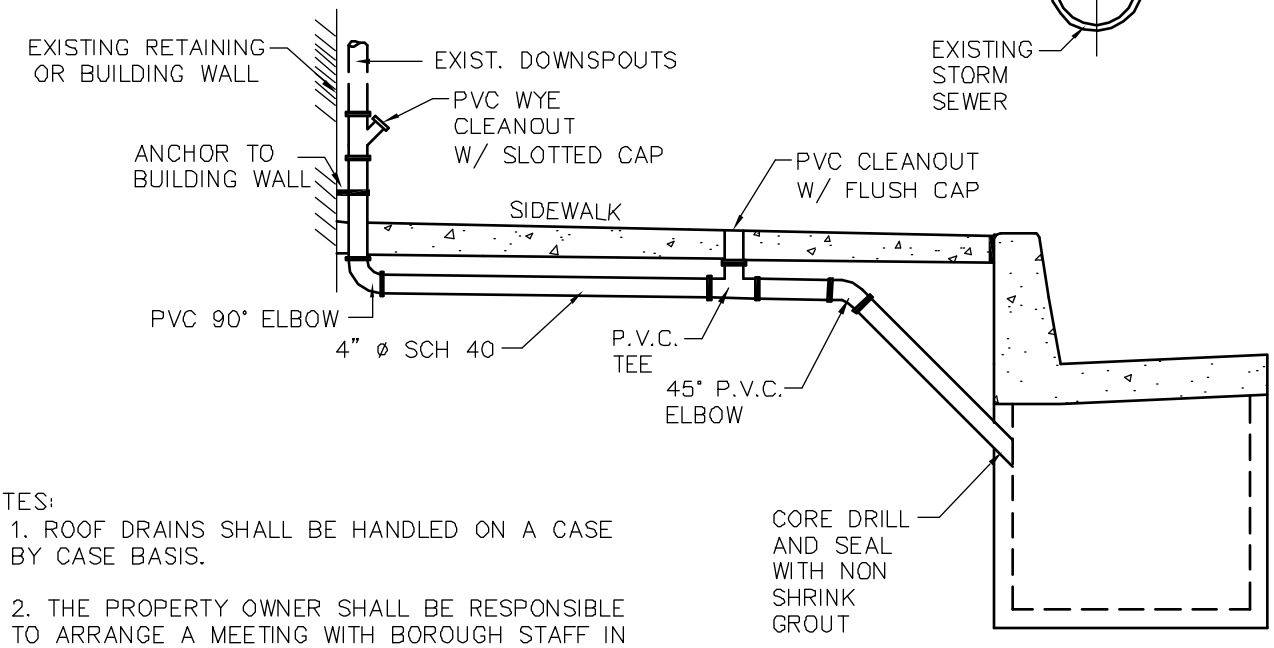

NOTES:

1. ROOF DRAINS SHALL BE HANDLED ON A CASE BY CASE BASIS.

2. THE PROPERTY OWNER SHALL BE RESPONSIBLE TO ARRANGE A MEETING WITH BOROUGH STAFF IN ORDER TO DETERMINE THE APPROPRIATE CONSTRUCTION DETAIL.

3. NO WORK SHALL BE PERFORMED WITHOUT THE BOROUGH'S APPROVAL OF THE PROPOSED CONSTRUCTION DETAIL.

4. SEE DETAIL 17 FOR THE STEEL TUBE ROOF DRAIN ENCASEMENT DETAIL.

ROOF DRAIN DETAILS

N.T.S.

DETAIL – 16

TYPICAL DETAILS

BOROUGH OF CONSHOHOCKEN

MONTGOMERY COUNTY, PENNSYLVANIA

ADOPTED MAY 2009

LAST REVISED MARCH 2015

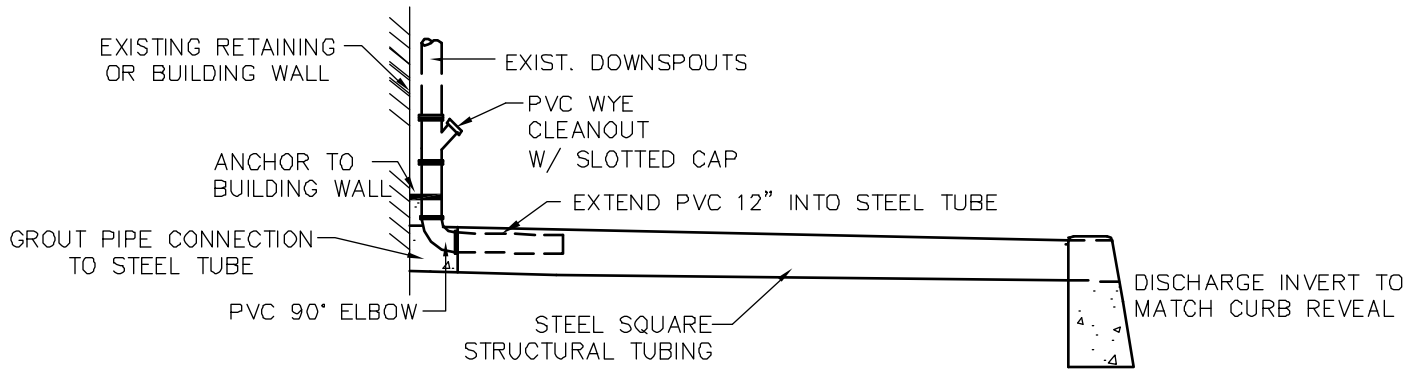

PROFILE

N.T.S.

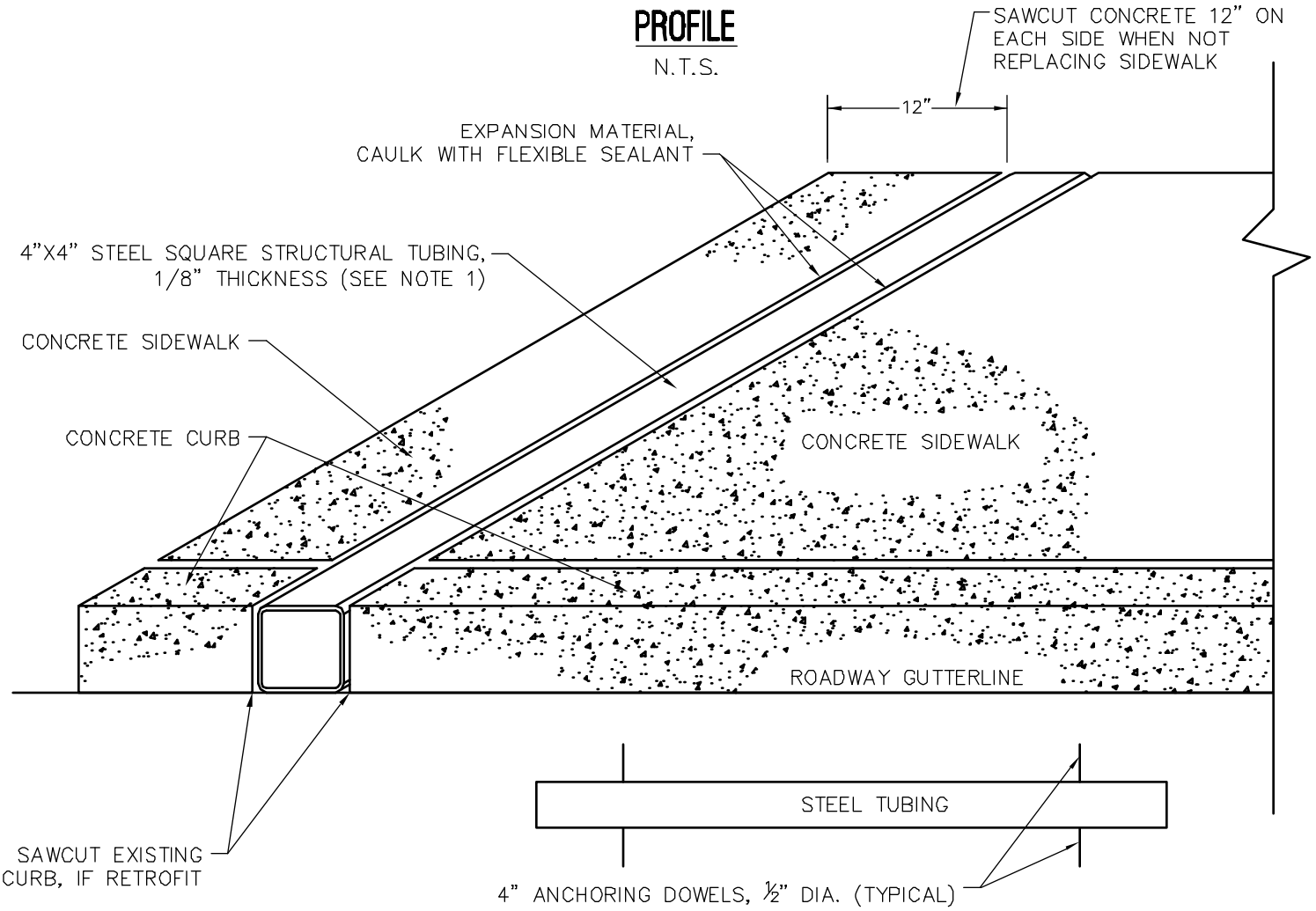

STEEL TUBE ROOF DRAIN ENCASEMENT DETAIL

N.T.S.

NOTES:

1. EXACT SIZE OF STEEL TUBING TO BE DETERMINED BY FIELD CONDITIONS OF PROJECT LOCATION, AND CURB REVEAL.

2. FOR RETROFITS SIDEWALK SHALL BE SAWCUT 12" ON EACH SIDE OF PROPOSED ROOF DRAIN LEADER ENCASEMENT. EXISTING CURB SHALL BE CUT TO THE OUTSIDE DIMENSION OF THE STEEL TUBING.

3. DOWELL SPACING TO BE DETERMINED BY LENGTH OF TUBING AND WIDTH OF SIDEWALK AT THE PROJECT LOCATION. (MINIMUM 4)

DETAIL – 17

TYPICAL DETAILS

BOROUGH OF CONSHOHOCKEN

MONTGOMERY COUNTY, PENNSYLVANIA

G:\Drafting\Drafting\PA\CONSH\detail booklet aug 2007\DETAILS BOOKLET.dwg, 3/24/2015 10:24:53 AM, Adobe PDF 1440.pc3

ADOPTED MAY 2009

LAST REVISED MARCH 2015

NOTES:

1. PRECAST INLET STRUCTURES SHALL BE CONSTRUCTED IN ACCORDANCE WITH PENNDOT STANDARD DETAIL FOR ROADWAY CONSTRUCTION RC-45M AND RC-46M.

2. ALL INLETS SHALL BE FINISHED WITH CONCRETE FLOW CHANNELS IN THE BASE.

3. INLET TOP UNITS SHALL BE SET TO GRADE AND ADJUSTED TO MATCH THE ROADWAY PROFILE SLOPE.

4. STORMWATER INLETS ASSOCIATED WITH NEW CONSTRUCTION SHALL HAVE 8" TOP UNITS AND BE SET 2.5" BELOW FINISHED GUTTERLINE GRADE PER DETAIL – 19 OF THESE TYPICAL DEATILS.

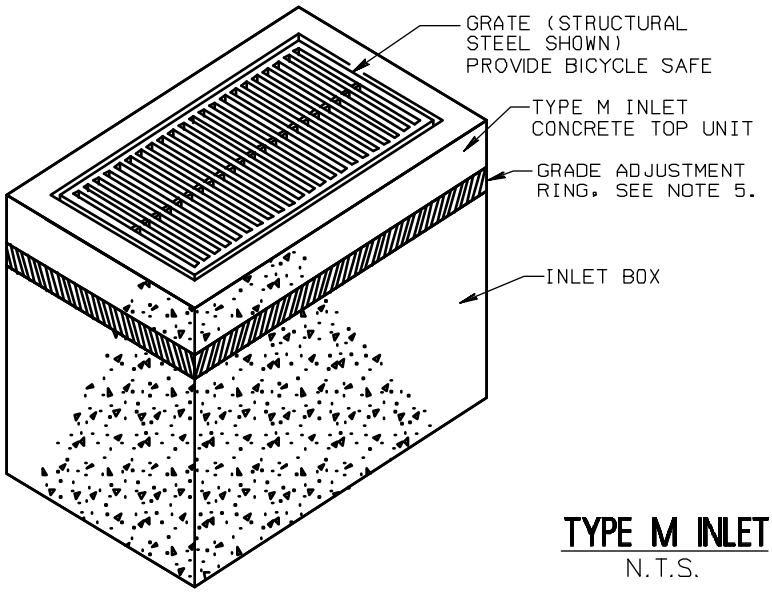

TYPE M INLET

N.T.S.

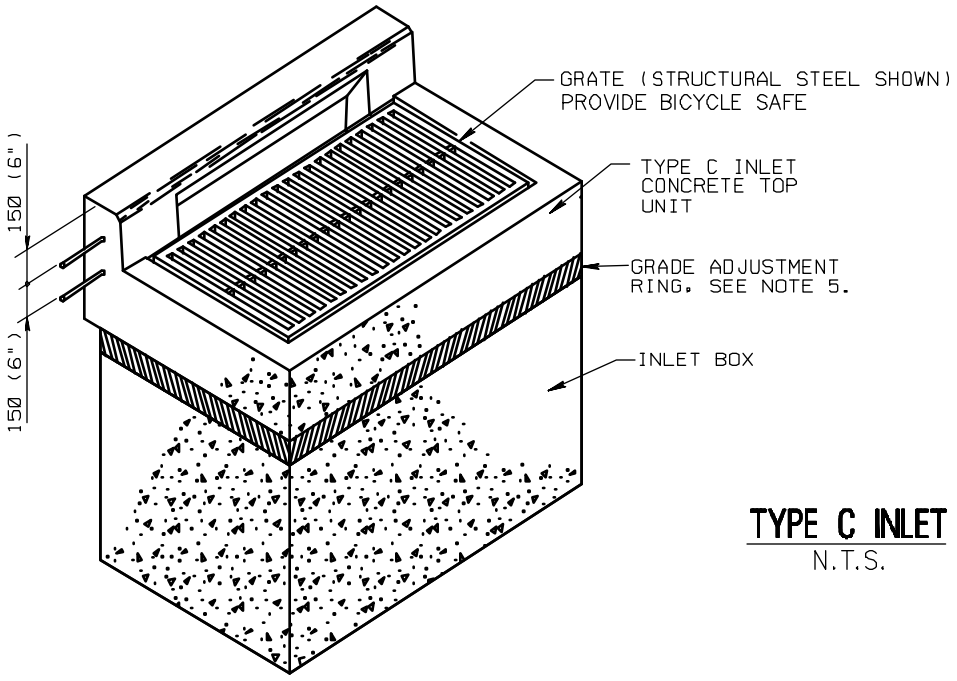

TYPE C INLET

N.T.S.

DETAIL – 18

TYPICAL DETAILS

BOROUGH OF CONSHOHOCKEN

MONTGOMERY COUNTY, PENNSYLVANIA

G:\Drafting\Drafting\PA\CONSH\detail booklet aug 2007\DETAILS BOOKLET.dwg, 3/24/2015 10:25:20 AM, Adobe PDF 144dpi.pc3

ADOPTED MAY 2009

LAST REVISED MARCH 2015

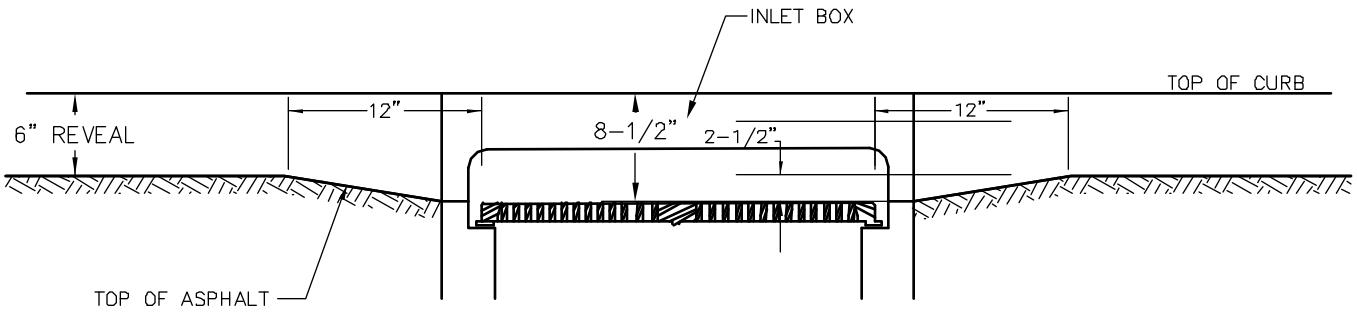

RECESSED INLET GRATE DETAIL

N.T.S.

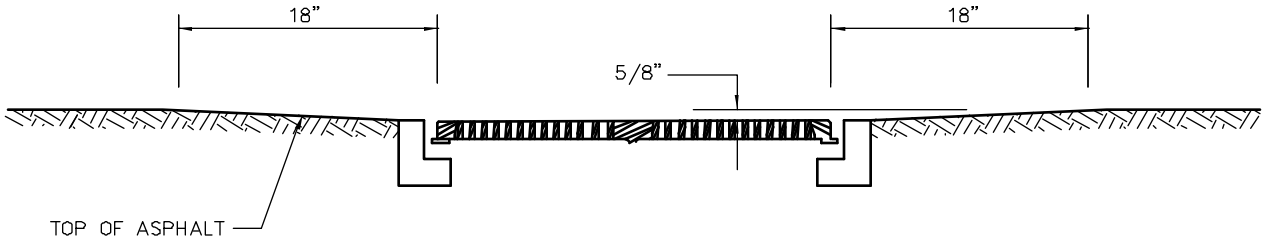

RECESSED MANHOLE COVER DETAIL

N.T.S.

NOTES:

1. CONTRACTOR SHALL MAKE EVERY EFFORT TO ADHERE TO THESE DETAILS. SHOULD FIELD CONDITIONS INHIBIT THE CONTRACTOR FROM MEETING THE REQUIRED DIMENSIONS, THE ENGINEER SHALL BE NOTIFIED IMMEDIATELY.

2. THESE DETAILS APPLY TO BOTH ROADWAY REHABILITATIONS, UTILITY TRENCH RESTORATION AND NEW CONSTRUCTION.

3. CURB REVEALS SHALL BE 6" UNLESS OTHERWISE DIRECTED.

DETAIL - 19

TYPICAL DETAILS

BOROUGH OF CONSHOHOCKEN

MONTGOMERY COUNTY, PENNSYLVANIA

ADOPTED MAY 2009

LAST REVISED MARCH 2015

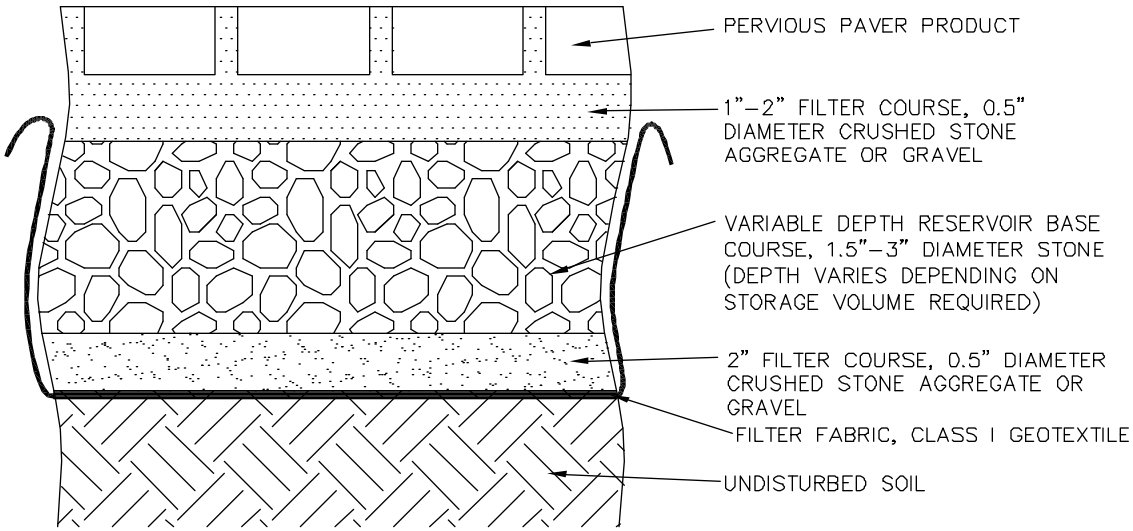

PERMEABLE PAVER SURFACE DETAIL

N.T.S.

NOTES:

1. THE DETAIL PROVIDED IS ILLUSTRATIVE ONLY. THE PROPERTY OWNER SHALL PROVIDE DETAILS FOR THE DESIRED PRODUCT FOR REVIEW BY THE BOROUGH ENGINEER.

2. FILTER COURSE AND RESERVOIR AGGREGATE SHALL BE CLEAN/WASHED STONE.

3. GEOTEXTILE FILTER FABRIC SHALL BE MIRAFI #14N, OR APPROVED EQUAL.

DETAIL – 20

TYPICAL DETAILS

BOROUGH OF CONSHOHOCKEN

MONTGOMERY COUNTY, PENNSYLVANIA