BOROUGH OF CONSHOHOCKEN

Office of the Borough Manager

Zoning Administration

BOROUGH COUNCIL
Colleen Leonard, President
Tina Sokolowski, Vice-President
Robert Stokley, Member
Anita Barton, Member
James Griffin, Member
Jane Flanagan, Member
Karen Tutino, Member

Yaniv Aronson, Mayor

Stephanie Cecco, Borough Manager

ZONING NOTICE
MARCH 15th, 2021 ZONING HEARING BOARD MEETING TO OCCUR VIA REMOTE MEANS

ZONING HEARING Z-2021-03

NOTICE IS HEREBY GIVEN that the Conshohocken Zoning Hearing Board will conduct a public hearing on March 15th, 2021 at 7:00 p.m. prevailing time via remote means. The public is encouraged to participate as set forth below.

This meeting will be held using a Go-To-Meeting Platform. To the extent possible, members of Conshohocken Zoning Hearing Board and Borough staff/professionals will participate via both video and audio. (INSTRUCTIONS ON SECOND PAGE)

At this time, the Conshohocken Zoning Hearing Board will hear testimony and accept evidence on the following request.

PETITIONER:	New Cingular Wireless, PCS, LLC d/b/a AT&T Mobility C/O Alyson J. Frtizges, Esq. 717 Constitution Dr. Suite 201, Exton, PA 19341
PREMISES INVOLVED:	Public Right-of-Way adjacent to 139 W. 3rd Ave. Conshohocken, PA 19428 BR-1 - Borough Residential 1
OWNER OF RECORD:	PECO Energy 2301 Market Street, Philadelphia, PA 19163

The Petitioner is requesting a variance from Borough Zoning Code Sections Part 10, 27-814(5), and 27-814(6)(A)(1, 3, 4, and 5) to permit a utility pole mounted telecommunications facility within the public right-of-way in the BR-1 zoning district.

Persons who wish to become parties to the application must notify the Borough of their intent to ask for party status at least five (5) days prior to the scheduled hearing by emailing the attached entry of appearance form to zoning@conshohockenpa.gov. Said persons must be available to participate in the zoning hearing on the scheduled date and time. It is noted that submitting the attached entry of appearance form does not guarantee that you will be granted party status. The Zoning Hearing Board decides who may participate in the hearing before it as a party, subject to Section 908(3) of the Municipalities Planning Code (MPC). The MPC permits party status to any person "affected" by the application. Having taxpayer status alone is not enough to claim party status; however, a person whose property or business abuts the property that is the subject of the appeal is affected and should qualify as a party. Ultimately, the ZHB makes the party status determination after reviewing the request.

Thank you,
Zoning Hearing Board

BOROUGH OF CONSHOHOCKEN
Office of the Borough Manager

Zoning Administration

BOROUGH COUNCIL
Colleen Leonard, President
Tina Sokolowski, Vice-President
Robert Stokley, Member
Anita Barton, Member
James Griffin, Member
Jane Flanagan, Member
Karen Tutino, Member

Yaniv Aronson, Mayor

Stephanie Cecco, Borough Manager

ZONING HEARING REMOTE SESSION ACCESS INSTRUCTIONS

The public is encouraged to participate as follows:

Audio Feed Participation: You may dial-in to access the audio feed of the meeting. All participants (whether listening or providing comments) must use this method of audio participation, even those using Go-To-Meeting to access the video feed. To access audio, please use the below number and access code/ password information.

We ask that you please always keep your phones on mute, unless giving a public comment as set forth in the Public Comment section below.

Please join my meeting from your computer, tablet or smartphone.
https://global.gotomeeting.com/join/972846509

You can also dial in using your phone.
United States (Toll Free): 1 866 899 4679

Access Code: 972-846-509

New to GoToMeeting? Get the app now and be ready when your first meeting starts:
https://global.gotomeeting.com/install/972846509

If you have already downloaded the Go-To-Meeting application, the link will redirect you to the application itself. Please follow the instructions.

It is recommended that you download the application in advance of the meeting time. If you attempt to sign in prior to the start of the meeting, the Go-To-Meeting application will inform you that the meeting has not started. Please close the application and log back in at the time of the meeting (7:00 PM).

Public Comment: There will be a designated time on the agenda for public comment. Those with public comment shall state their name and address. Prior to the start of the meeting, you may submit written comments by e-mailing them to Bmyrsiades@conshohockenpa.gov. Similarly, during the meeting, you may submit written comments by e-mailing them to bmyrsiades@conshohockenpa.gov.

Public comments submitted in this manner will be read by a member of Borough Administration during the public comment period. Because the actual time of the public comment period is determined by the pace of the meeting, please submit all comments as soon as possible, whether before or during the meeting. Written comments shall include the submitting person's name, address, and property in question.

The Conshohocken Zoning Hearing Board thanks you in advance for your cooperation during the remote meeting. If you encounter problems participating during the meeting, or have questions regarding the above prior to the meeting, please contact the Borough at bmyrsiades@conshohockenpa.gov.

BOROUGH OF CONSHOHOCKEN
Office of the Borough Manager

Zoning Administration

BOROUGH COUNCIL
Colleen Leonard, President
Tina Sokolowski, Vice-President
Robert Stokley, Member
Anita Barton, Member
James Griffin, Member
Jane Flanagan, Member
Karen Tutino, Member

Yaniv Aronson, Mayor

Stephanie Cecco, Borough Manager

The Borough of Conshohocken Zoning Hearing Board
Entry of Appearance as a Party

I/We _____

Request to be granted party status in Application Z-2021-03.

Applicant: New Cingular Wireless, PCS, LLC d/b/a AT&T Mobility – W. 3rd Ave Public Right-of-Way

Please print name and address below:

_____

_____

_____

_____

Please Sign Below:

_____

_____

Please return form via mail or e-mail to the below:
(Entry must be received no later than March 10th, 2021)

MAIL:
Borough of Conshohocken
Attn: Bobbi Jo Myrsiades
400 Fayette St. – Suite 200
Conshohocken, PA 19428

E-MAIL:
zoning@conshohockenpa.gov

MAYOR
Yaniv Aronson

BOROUGH COUNCIL
Colleen Leonard, President
Tina Sokolowski, Vice-President
Robert Stokley, Senior Member
Anita Barton, Member
James Griffin, Member
Jane Flanagan, Member
Karen Tutino, Member

Stephanie Cecco
Borough Manager

BOROUGH OF CONSHOHOCKEN

Office of the Borough Manager

MEMORANDUM

Date: February 25, 2021

To: Stephanie Cecco, Brittany Rogers

From: Eric P. Johnson, PE

Re: W. 3rd Ave Right-of-Way - Adjacent 139 W. 3rd Ave
New Cingular Wireless PCS, LLC, d/b/a AT&T Mobility
Zoning Determination

History of the Site:

The site is an existing 35-foot-high wooden utility pole located along the southern side of the W. 3rd Ave public right-of-way adjacent to 139 W. 3rd Ave and in the Borough Residential 1 (BR-1) Zoning District. The pole is owned by PECO and carries both electrical distribution and telecommunication lines, along with a cobra head style streetlight.

Current Request:

The Applicant has an attachment agreement with PECO and proposes to replace the existing utility pole with a 43-foot-tall wood pole and install wireless antenna on top of the pole for a total height of 45.5 feet. The radio equipment associated with the antenna will be housed within a concealing equipment shroud at a height of approximately 12' above the ground. The cobra style streetlight will be installed at a height of 25 feet, matching the existing streetlight. The applicant has indicated the new wireless antenna is needed to enhance wireless telecommunications services and address capacity issues within the Borough.

Zoning Determination:

Per §27-814.5, wireless communication facilities utilizing stealth design are permitted by right in the BC, LI, SP-1, SP-2, and SP-3 zoning districts; and by conditional use in the LI, SP-1, SP-2, and SP-3 zoning districts. The proposed wireless communication facility is located in the BR-1 zoning district and would require a variance.

Per §27-814.6.A(1), telecommunications towers may not be located closer than 500 feet to any residential zone. Antennas located on preexisting buildings or structures are exempt from this requirement. The proposed taller utility pole is considered a new structure that is being installed to serve as a telecommunication tower and will be located in the BR-1 residential district. Therefore, a variance would be required.

Per §27-814.6.A(3), a fall zone shall be established such that the tower is setback 100% of the height of the tower from any adjoining lot line or non-appurtenant building. The new utility pole and antenna will have a combined height of 45.5 feet and is located less than 45.5 feet from adjoining lot lines or non-appurtenant building. Therefore, a variance would be required.

Per §27-814.6.A(4), towers shall be enclosed by security fencing not less than eight feet in height. Towers shall also be equipped with appropriate anti-climbing measures. Fences are not usually required around a utility pole; however, the proposal to use the subject utility pole as a telecommunication tower triggers the requirement for fencing. Therefore, a variance would be required.

Per §27-814.6.A(5), telecommunication towers shall be landscaped with a buffer of plant materials that effectively screens the view of the tower from properties used for residences or any other area frequented by the public. Landscaping is not usually required around a utility pole; however, the proposal to use the subject utility pole as a telecommunication tower triggers the requirement for landscaping. Therefore, a variance would be required.

Per Part 10 - BR-1 - Borough Residential District 1, wireless communication facilities and telecommunication towers are not a permitted use. The applicant is seeking a variance to permit a wireless communication facility on a telecommunication tower in the BR-1 zoning district in connection with requested variance from 27-814.5 as outlined above.

Per §27-814.7, all Applicants seeking approval for a wireless communication facility shall demonstrate a good faith effort to collocate with other carriers as outlined by the code. The applicant will need to provide documentation that a good faith effort to collocate has been made.

Per §27-814.9.A, a Comprehensive Service Plan is required providing evidence that any proposed location of wireless telecommunications antennas and any supporting tower has been planned to result in the fewest number of towers within the Borough of Conshohocken at the time full service is provided by the applicant throughout the municipality. The plan shall indicate how the applicant proposes to provide full service throughout the municipality and, to the greatest extent possible, said service plan shall also indicate how the applicant's plan is coordinated with the needs of all other providers of telecommunication services within the Borough of Conshohocken.

Per §27-814.9.I, a notarized statement by the Applicant as to whether construction of the tower will accommodate collocation of additional antennas for future users is required.

Per §27-814.9.K, a letter of commitment to lease excess space to other potential users at prevailing market rates and conditions in a form suitable for recording with the County Clerk is required prior to the issuance of any permit.

Per §27-814.3.C, the requirements of §27-814 govern antennas that are installed at a height in excess of the height limitations specified for each zoning district.

BEFORE THE ZONING HEARING BOARD OF CONSHOHOCKEN BOROUGH, MONTGOMERY COUNTY, PENNSYLVANIA

IN RE: **APPLICATION OF NEW CINGULAR WIRELESS PCS, LLC d/b/a AT&T MOBILITY**
CON01_003
Small Cell Application for Utility Pole in Public ROW Near 139 W. 3rd Avenue

Hearing Date: March 15, 2021

APPLICANT'S EXHIBITS

A-1	Application of New Cingular Wireless PCS, LLC d/b/a AT&T Mobility to the Conshohocken Zoning Hearing Board
A-2	Pole Attachment Agreement between PECO Energy and New Cingular Wireless, PCS, LLC d/b/a AT&T Mobility *(Redacted as to Financial Terms)* and Permit for Joint Use of PECO Energy Facilities
A-3	Curriculum Vitae of Shaun Paul
A-4	FCC License
A-5	Radio Frequency Design Report prepared by RF Services, Inc. dated February 25, 2021
A-6	Propagation Maps
A-7	FCC Compliance Analysis prepared by dBm Engineering dated February 25, 2021
A-8	Letter on FCC Compliance and Non-Interference prepared by RF Services, Inc. dated February 25, 2021
A-9	Site Plan prepared by Jacobs Engineering Group dated November 12, 2018 and last revised August 21, 2020
A-10	Photographs of Similar Poles within the Borough

Alyson J. Fritzges, Esquire
alysonf@rrhc.com
Extension: 234

RILEY RIPER HOLLIN & COLAGRECO
ATTORNEYS AT LAW

February 16, 2021

VIA UPS OVERNIGHT MAIL

Stephanie Cecco, Borough Manager
Borough of Conshohocken
400 Fayette Street, Suite 200
Conshohocken, PA 19428

RE: New Cingular Wireless PCS, LLC, d/b/a AT&T Mobility
Zoning Hearing Board Application
Concerning AT&T Small Cell Facility within Public ROW near
139 W. 3rd Avenue, Conshohocken

Dear Ms. Cecco:

There is a need to enhance wireless telecommunications services and address capacity issues within the Borough of Conshohocken. Toward that end, Applicant New Cingular Wireless PCS, LLC d/b/a AT&T Mobility ("AT&T") proposes the installation of a new telecommunications facility within the public right-of-way near 139 W. 3rd Avenue which is zoned BR-1.

AT&T proposes a replacement light pole consisting of a 43-foot wooden pole, light fixture at 25', with a small, coffee can-style antenna on top of the replacement pole for an overall height of 45'-6". The radio equipment necessary to operate the AT&T antenna will also be placed on the replacement light pole housed within a concealing equipment shroud, at a height of approximately 12' above the ground, such that no equipment will be placed on the ground and cable routed within the pole.

Enclosed are the following in support of this Application:

1. Original and one (1) copy of the completed Zoning Hearing Board Application with Addendum "A";

2. Pole Attachment Agreement between PECO Energy and New Cingular Wireless PCS LLC d/b/a AT&T Mobility (redacted as to financial information);

3. Two sets of site plans prepared by Jacobs Engineering Group, Inc. dated November 12, 2018 and last revised August 21, 2020;

4. One (1) flash drive containing all documents included with this submission;

5. One (1) check in the amount of $500.00 made payable to the Borough of Conshohocken representing the application fee.

Applicant will present additional documentation and testimony in support of the application at the hearing.

Please advise whether the Applicant is responsible for handling public notice and/or posting of the property or whether the Borough will assume that responsibility. Unless I hear differently, I will assume the Borough handles all notice requirements.

Kindly advise when this application will be heard before the Zoning Hearing Board. Also, please let me know if any other Boards or Committees will review the application, as we would like the opportunity to attend and present the merits.

Thank you very much for your assistance in this matter. If you have any additional questions or need further documentation, please feel free to give me a call.

Very truly yours,

Alyson J. Fritzges

ALYSON J. FRITZGES

AJF/kw
Enclosures

cc: Samantha Berman (via email only, w/encl.)

BOROUGH OF CONSHOHOCKEN
400 Fayette Street, Suite 200, Conshohocken, PA 19428
Phone (610) 828-1092 Fax (610) 828-0920

Zoning Application

Application: Z-2021-03
Date Submitted: 2-17-21
Date Received: 2-17-21

1. Application is hereby made for:

   ☐ Special Exception ☑ Variance

   ☐ Appeal of the decision of the zoning officer

   ☐ Conditional Use approval ☐ Interpretation of the Zoning Ordinance

   ☐ Other _____

2. Section of the Zoning Ordinance from which relief is requested:
   Part 10 and Section 27-814

3. Address of the property, which is the subject of the application:
   Public Right-of-Way near 139 W. 3rd Ave.

4. Applicant's Name: New Cingular Wireless, PCS, LLC d/b/a AT&T Mobility
   Address: c/o Alyson J. Fritzges, Esq. 717 Constitution Drive, Suite 201, Exton, PA 19341
   Phone Number (daytime): 610-458-4400
   E-mail Address: Alysonf@rrhc.com

5. Applicant is (check one): Legal Owner ☐ Equitable Owner ☐; Tenant ☑

6. Property Owner: PECO Energy
   Address: 2301 Market Street, Philadelphia, PA 19163
   Phone Number: _____
   E-mail Address: _____

7. Lot Dimensions: N/A Zoning District: BR-1

8. Has there been previous zoning relief requested in connection with this Property?

Yes ☐ No ☑ If yes, please describe.

None that applicant is aware of.

9. Please describe the present use of the property including any existing improvements and the dimensions of any structures on the property.

Public R-O-W with existing PECO utility pole. See enclosed plans for details of existing structure.

10. Please describe the proposed use of the property.

See attached Addendum "A".

11. Please describe proposal and improvements to the property in detail.

See attached Addendum "A"

12. Please describe the reasons the Applicant believes that the requested relief should be granted.

See attached Addendum "A".

13. If a Variance is being requested, please describe the following:

a. The unique characteristics of the property: _____

See attached Addendum "A"

b. How the Zoning Ordinance unreasonably restricts development of the property:

See attached Addendum "A"

c. How the proposal is consistent with the character of the surrounding neighborhood. _____

See attached Addendum "A"

d. Why the requested relief is the minimum required to reasonably use the property; and why the proposal could not be less than what is proposed.

See attached Addendum "A"

14. The following section should be completed if the applicant is contesting the determination of the zoning officer.

a. Please indicate the section of the zoning ordinance that is the subject of the zoning officer's decision (attach any written correspondence relating to the determination).

b. Please explain in detail the reasons why you disagree with the zoning officer's determination.

15. If the Applicant is requesting any other type of relief, please complete the following section.

a. Type of relief that is being requested by the applicant.

b. Please indicate the section of the Zoning Ordinance related to the relief being requested.

c. Please describe in detail the reasons why the requested relief should be granted.

16. If the applicant is being represented by an attorney, please provide the following information.

a. Attorney's Name: Alyson J. Fritzges, Esquire, Riley Riper Hollin & Colagreco

b. Address: 717 Constitution Drive, Suite 201, Exton, PA 19341

c. Phone Number: 610-458-4400

d. E-mail Address: Alysonf@rrhc.com

BOROUGH OF CONSHOHOCKEN
400 Fayette Street, Suite 200, Conshohocken, PA 19428
Phone (610) 828-1092 Fax (610) 828-0920

Decision

(For Borough Use Only)

Application Granted ☐ Application Denied ☐

MOTION:

CONDITIONS:

BY ORDER OF THE ZONING HEARING BOARD

	Yes	No
_____	☐	☐
_____	☐	☐
_____	☐	☐
_____	☐	☐
_____	☐	☐

DATE OF ORDER: _____

I/we hereby certify that to the best of my knowledge, all of the above statements contained in this Zoning Application and any papers or plans submitted with this application to the Borough of Conshohocken are true and correct.

Alyson J. Fritzges, Esquire, Attorney for Applicant

Applicant

See enclosed Pole Attachment Agreement

Legal Owner

2/12/21

Date

COMMONWEALTH OF PENNSYLVANIA

COUNTY OF ~~MONTGOMERY~~ Chester

As subscribed and sworn to before me this 12th day of February, 2021.

Kathleen C. Hopta

Notary Public

(Seal)

Commonwealth of Pennsylvania - Notary Seal
KATHLEEN C HOPTA - Notary Public
Chester County
My Commission Expires September 23, 2024
Commission Number 1375764

BEFORE THE ZONING HEARING BOARD
OF THE BOROUGH OF CONSHOHOCKEN

IN RE: ZHB APPLICATION OF
NEW CINGULAR WIRELESS PCS, LLC, d/b/a AT&T MOBILITY
Replacement Light Pole in Public Right-of-Way Near 139 W. 3rd Avenue

ADDENDUM "A" TO ZONING HEARING BOARD APPLICATION

I. BACKGROUND

There is a need to enhance wireless telecommunications services and address capacity issues within the Borough of Conshohocken. Toward that end, Applicant New Cingular Wireless PCS, LLC d/b/a AT&T Mobility ("AT&T") proposes the installation of a new telecommunications facility within the public right-of-way near 139 W. 3rd Avenue and zoned BR-1.

AT&T proposes a replacement light pole consisting of a 43-foot wooden pole, light fixture at 25', with a small, coffee can-style antenna on top of the replacement pole for an overall height of 45'-6". The radio equipment necessary to operate the AT&T antenna will also be placed on the replacement light pole housed within a concealing equipment shroud, at a height of approximately 12' above the ground, such that no equipment will be placed on the ground and cable routed within the pole.

II. REQUEST FOR APPROVAL

1. AT&T requests a variance from Part 10, Section 27-814(5) and, to the extent necessary, Section 27(6)(A)(1) of the Conshohocken Borough Zoning Ordinance to allow for the replacement light pole in the public right-of-way near 139 W. 3rd Avenue in the BR-1 District.

2. To the extent necessary, AT&T requests a variance from Section 27-814(6)(A)(3) to allow the replacement light pole to be within 46 ft. of nearest property lines and/or buildings.

3. To the extent necessary, AT&T requests a variance from Section 27-814(6)(A)(4) and Section 27-814(6)(A)(5) to eliminate fencing and screening requirements. Fencing is not practicable or needed to ensure the safety and security of the light pole installation and landscaping is unnecessary to protect and maintain aesthetics.

4. Applicant also applies for such other interpretations and/or waivers as may ultimately be required.

III. REASONS WHY APPLICATION SHOULD BE GRANTED

The proposed use is suitable for the location, is in the best interests of the community, and is consistent with the general criteria established by the Conshohocken Borough Zoning Code. As such, the requested relief should be granted for the following reasons:

1. Grant of variance relief is appropriate being that the proposed facility is replacing an existing light pole with a new light pole. The telecommunications use fits with the intent of the provisions for the zoning district, will have no adverse impact on traffic generation and congestion, noise, smoke, dust, fumes, vapors, gases, heat, odor, glare, vibration, or other nuisances, external storage, solid waste disposal, sewer or water facilities.

2. The proposed facility is necessary in order for AT&T to provide telecommunications service in accordance with their respective Federal Communications Commission licenses and the Telecommunications Act of 1996.

3. The replacement pole establishing a telecommunications facility is a passive communications use, and is suitable and appropriate for placement at the proposed location. The proposed use is consistent with the spirit, purpose and intent of the Borough Code.

4. The proposed use will not substantially injure or detract from the use of neighboring properties or from the character of the neighborhood and the use of the properties adjacent to the light pole will be adequately safeguarded.

5. The proposed use will serve the best interest of the Borough, the convenience of the community, and the public welfare by making wireless telecommunications service available.

6. The proposed use will be entirely consistent with the logical, efficient and economical extension of public services and facilities within the Borough, including police and fire protection.

7. The proposed use will be designed in accordance with all applicable safety and industry standards, and will not endanger the safety of persons or property.

8. The proposed use will not over-crowd the land or create an undue concentration of population.

9. The proposed use will not impair an adequate supply of light and air to adjacent property.

10. The proposed use will be fully automated and unattended on a daily basis and will be visited only for periodic maintenance or emergency repair.

11. The proposed use will not adversely affect transportation or unduly burden public facilities.

12. The relief, if authorized, will represent the minimum relief necessary in order for AT&T to modernize its telecommunications network. The height of the telecommunications support structure is the minimum height necessary to perform its function and achieve such design objectives.

13. The telecommunications facility complies with all applicable standards established by the Federal Communications Commission.

14. The telecommunications facility shall not cause radio frequency interference with other communications facilities located in the Borough.

15. AT&T is licensed by the Federal Communications Commission to operate the telecommunications facility.

16. The telecommunications facility shall comply with all applicable Federal Aviation Administration and Commonwealth Bureau of Aviation Regulations.

17. The surrounding neighborhood will not be subjected to objectionable noise, lighting, glare, heat, ventilation, smoke, fumes, vapors, dust, dirt, gases or radioactive or electrical disturbances by the proposed use or change. No signs will be mounted on the telecommunications facility.

18. The telecommunications facility will be maintained in a safe manner in accordance with the requirements of the Borough's Building Code.

For all of the reasons stated above, Applicant requests **variance** relief and any other waivers/interpretations the Zoning Hearing Board deems appropriate.

Detailed Plans of the proposed use have been submitted to the Borough, to be incorporated by reference herein, for consideration before the Zoning Hearing Board.

Respectfully submitted,

RILEY RIPER HOLLIN & COLAGRECO

Date: February 16, 2021

By: *Alyson J. Fritzges*

Alyson J. Fritzges, Esquire
Attorney for Applicant
New Cingular Wireless PCS, LLC, d/b/a
AT&T Mobility

POLE ATTACHMENT AGREEMENT

DISTRIBUTION INFRASTRUCTURE

Between

PECO Energy Company

And

New Cingular Wireless PCS, LLC

A Delaware limited liability company

Table of Contents

1.0 PURPOSE AND CONSTRUCTION OF AGREEMENT. 1

2.0 DEFINITIONS. 1

3.0 TERM OF AGREEMENT. 3

4.0 AUTHORITY FOR ATTACHEMNTS AND MODIFICATIONS. 3

5.0 APPLICATION FOR ATTACHMENTS AND MODIFICATIONS. 4

6.0 ATTACHMENT OF EQUPMENT TO PECO POLES. 6

7.0 COST AND SCHEDULING OF MAKE READY 7

8.0 MAINTENANCE AND REPAIR 8

9.0 REMOVAL, REPLACEMENT OR RELOCATION. 9

10.0 PECO FACILITIES. 10

11.0 COMPENSATION. 10

12.0 LIABILITY AND INDEMNIFICATION. 11

13.0 INSURANCE AND BOND. 12

14.0 DEFAULT, TERMINATION AND OTHER REMEDIES. 14

15.0 ASSIGNMENT. 15

16.0 REPRESENTATIONS AND WARRANTIESS. 16

17.0 FORCE MAJEURE. 16

18.0 MISCELLANOUS. 16

POLE ATTACHMENT AGREEMENT

THIS POLE ATTACHMENT AGREEMENT (this "Agreement") is made as of this 22nd day of June 2018, by and between PECO Energy Company, a Pennsylvania corporation ("PECO") and New Cingular Wireless, PSC, LLC ("Licensee", which term shall include its wholly-owned subsidiaries).

In consideration of the mutual covenants, terms and conditions contained, and intending to be legally bound, the parties agree as follows:

1.0 PURPOSE AND CONSTRUCTION OF AGREEMENT.

1.1. Licensee desires to locate certain of its network facilities on electrical distribution poles that are owned by PECO.

1.2. PECO owns valuable pole plant that it acquired, constructed and maintains at considerable cost and expense. The parties agree that it would serve their mutual economic and other interest of Licensee, under the conditions set forth herein and to the extent it may lawfully do so, to attach its antennae, support mounts and structures, fiber optic cable, cable equipment, microcell and all approved accessories (collectively, the "Equipment") to PECO's poles. PECO will permit the placement of Licensee's Equipment to certain of such electrical distribution poles, provided (a) PECO receives appropriate compensation as set forth in this Agreement. (b) PECO is protected from all liability that may result from Licensee's use of such Equipment or PECO Poles (except as otherwise provided herein), and (c) such Equipment does not materially interfere with PECO's own service and operating requirements, including considerations of safety, reliability, and engineering. The permission to use PECO Poles being granted by PECO to Licensee hereunder shall be subject and subordinate in all respects to PECO's service and operating requirements.

1.3. This Agreement is not intended, and shall not be construed, to authorize any action by Licensee that would adversely affect the equality or reliability of the service provided by PECO. Nor shall it be construed so as to preclude PECO from taking any action that it considers reasonably necessary or appropriate to maintain the reliability or quality of such service or to insure the safety of its employees, its customers, or the public.

1.4. Through this Agreement, PECO intends to give Licensee and Licensee intends to receive a license to use particular PECO Poles for Licensee's Equipment only in the manner and solely for the purposes set forth herein. No leasehold or easement rights and no interest in real estate or other interest in property is granted or intended to be granted by this Agreement. No use, however extended, of PECO Poles under this Agreement shall create or vest in Licensee any ownership or property rights in PECO Poles.

1.5. Licensee acknowledges that this Agreement was negotiated between PECO and Licensee, that Licensee has had an adequate opportunity to review the Agreement, that it has made an independent assessment of the business risks and benefits of entering into this Agreement, and that based on this evaluation, Licensee desires to enter into this Agreement.

1.6. The laws of the Commonwealth of Pennsylvania, without regard to its conflict of law principles, shall govern the construction of this Agreement.

2.0 DEFINITIONS.

2.1. " Application" means the Application for Joint Use of PECO Facilities in the form attached hereto as Exhibit "A" submitted by Licensee to obtain permission from PECO for the placement, Modification or removal of any of Licensee's Equipment on or from PECO Poles.

2.2. "Attachment" or "Attachments" means one or more items of Licensee's Equipment that is used by Licensee in providing wireline, wires telecommunications or cable television service and that is placed on PECO Poles pursuant to this Agreement.

2.3. "Wire" means a single aerial cable or wire or fiber optic strand used by Licensee to provide Licensee Service and any hardware or equipment mounted therein, including without limitation cable amplifiers and splice boxes, that are owned by Licensee and attached to PECO Poles pursuant to this Agreement. Wire is "placed on" or "attached to" a PECO Pole if any portion of it is physically located on the PECO Pole. Licensee shall provide a detailed description of Licensee's Cable in its Application.

2.4. "PECO Pole" or "Pole" means an electrical distribution pole, the highest energized voltage of which is 69 kilo-volts owned by PECO.

2.5. "Cost" or "Costs" means PECO'S fully-allocated costs, including without limitation all direct and indirect costs for labor, time, services, material, contractors and related engineering and administrative expense, as determined by PECO in accordance with its standard and applicable engineering, construction, accounting and billing practices and procedures.

2.6. "Effective Date" means the date of this Agreement.

2.7. "Equipment" means Licensee's antennae, support mounts and structures, fiber optic cable, cable equipment, microcell or other wireless equipment and all approved accessories that are used by Licensee in providing wireline or wireless telecommunications service. Licensee shall provide a detailed description in its Application of such Equipment and the number of proposed Attachments to PECO Poles. An Attachment is "placed on" or is "attached to" a PECO Pole if it is physically located on the pole.

2.8. "Environmental Laws" means all federal, state and local statutes, and all regulations or ordinances of any federal, state, county or local regulatory agency, relating to the protection of health, safety or the environment including, without limitation, the Clean Air Act, the Water Pollution Control Act, the Resource Conservation and Liability Act, the Toxic Substance Control Act, all statutes, rules and regulations applicable to wetlands and all similar state and local laws now or hereinafter enacted or amended.

2.9. "Facility" means and item of Equipment that is attached to PECO Poles. The term "facility" shall include any Modification approved by PECO in accordance with this Agreement.

2.10. "Hazardous Materials" means any waste, pollutant, toxic substance or hazardous substance, contaminant or material regulated by any Environmental Laws including, without limitation, petroleum or petroleum-based substances or wastes, asbestos and polychlorinated biphenyls.

2.11. "Licensee Service" means the wireline, wireless telecommunications or cable television services provided or intended to be provided by Licensee to its customers using its Equipment.

2.12. "Make Ready" is the replacements, changes and rearrangements, if any, to the facilities, equipment or plant of PECO and the facilities of other users and all related engineering and administrative work necessary to accommodate the attachment of Licensee's Equipment, or its proposed Modifications.

2.13. "Marked-Up Application" means the Application as reviewed and completed by PECO to identify any Make Ready or installation work, the estimated Cost thereof and any special conditions governing placement, Modification or removal of any Equipment on or from PECO Poles, Each Marked-Up Application shall constitute a billing for the estimated cost of any Make Ready or installation work described therein. The actual cost of such Make Ready or installation work, if different from the estimate, may be "trued up" as set forth in Article 7.1.

2.14. "Notice of Removal" shall have the meaning described in Section 9.1.

2.15. "Wireless" means the antenna, coax, support mounts and structures used by Licensee to provide wireless Licensee Service and any hardware or equipment mounted thereon, that are owned by Licensee and attached to PECO poles pursuant to this Agreement.

2.16. "Modification," Modifications or "Modify" means any change or altercation affecting the Equipment, including without limitation any change in the number, type, ownership or use of the Equipment, which causes the information provided by Licensee in the prior Application(s) to be incorrect or incomplete in any respect.

2.17. "Permit" means the document issued by PECO in the form attached hereto as Exhibit "B" when an application is granted, providing permission to licensee for the placement, Modification or removal on or from PECO Poles of the specific Equipment identified in the marked-Up Application.

2.18. "Standards and Specifications" means all standards, practices, procedures, rules, regulations and other requirements adopted by PECO and applicable to the construction, installation, modification, repair, maintenance, use, operation, relocation or removal of any Equipment, as such requirements may be revised, modified, restated, supplemented or updated by PECO from time to time.

3.0 TERM OF AGREEMENT.

3.1 This Agreement shall commence on its Effective Date and shall remain in effect for an initial period of five (5) years following the Effective Date (the "Initial Term"), unless terminated sooner in accordance with this Agreement. The Agreement will automatically renew on the same terms and conditions set forth herein for five (5) successive one (1) year renewal periods (each such one-year period referred to as a "Renewal Term"), except that the Annual Fees for each Attachment may be adjusted annually in accordance with Section 11.12 below ("Annual Fees"). The Agreement will be subject to termination by either party upon the giving by the party of written notice to the other party sixty (60) days prior to the termination of the anniversary date of the then current Renewal Term, unless the Agreement is otherwise terminated in accordance with this Agreement.

4.0 AUTHORITY FOR ATTACHMENTS AND MODIFICATIONS.

4.1. No Equipment shall be attached to any PECO Poles or Modified or Overlashed until (a) an Application has been submitted by Licensee, reviewed marked-up or approved by PECO, and accepted in marked-up form by Licensee, and a Permit has been issued by PECO, all in accordance with Articles 5.0, 6.0, 7.0 and 8.0 of this Agreement, and (b) Licensee has obtained all necessary permits, licensees, consents, certifications and approvals from all governmental authorities and third parties in connection therewith.

4.2. PECO may accept or reject an Application for a specific Pole or Poles in its reasonable discretion and may condition any such approval upon a specific size, location and manner or installation of the Equipment in its reasonable discretion in accordance with applicable law. Only as an example and

not in any way as a limitation, PECO may withhold its consent to a particular PECO Pole or to a particular size, location or manner of installation if PECO determines that (i) Licensee's use of a proposed PECO Pole is unsuitable or incompatible with PECO's use or proposed use of the PECO Pole or other property of PECO, (ii) a site or PECO Pole is insufficient capacity, or for reasons based upon applicable industry, operational, safety, reliability or engineering standards, (iii) the Equipment jeopardizes the structural integrity or climbability of the PECO Pole, or (iv) the Site Permit violates any covenants and restrictions applicable to the PECO Pole, other PECO facilities, or the property on which it is located. Licensee is subject to PECO's right to use such PECO Pole for its corporate purposes, as is more fully set forth below.

4.3. Licensee agrees to comply with any and all applicable laws, statutes, ordinances, rules and regulations related to the installation, use and operation of its Equipment. Additionally, Licensee shall obtain and maintain, at its sole cost and expense, and all easements, licenses, consents, franchises, certifications, permits or other authorizations required from any property owner or governmental entity in connection with the installation, use and operation of Licensee's Equipment on any PECO Poles. Licensee shall be responsible for the cost of all such permits or approvals, whether such charges are imposed against Licensee or PECO. PECO may, at its sole discretion, request evidence that all such easements, licenses, consents, franchises, certifications, permits, approvals and authorizations have been obtained and are in full force and effect, and Licensee agrees to promptly provide the requested information.

4.4. Licensee shall not place any Equipment on PECO Poles until all necessary Make Ready work has been performed by PECO or its contractor, or Licensee's contractor approved in accordance with Section 5.10 hereof.

4.5. Licensee shall install, maintain and remove all Equipment in accordance with PECO's Standards and Specifications. Licensee shall be responsible for familiarizing itself with the Standards and Specifications. PECO will provide Licensee with a current copy of its Standards and Specifications at the time of execution of this Agreement. Subsequently, upon PECO's receipt from Licensee of a Pole Attachment Application for the placement, Modification or removal of any of Licensee's Equipment on or from PECO Poles, PECO will provide Licensee with a copy of its then-current Standards and Specifications.

4.6. The permission given by PECO to Licensee to use the PECO Poles under this Agreement shall in no way limit PECO's use of PECO Poles for its own business operations, or the rights or privileges previously given by PECO to any third parties, not party to this Agreement, to use any PECO Poles, whether or not such PECO Poles are at any time occupied by Licensee's Equipment.

4.7. In the event of any emergency or condition during installation that threatens persons or property, PECO may, in its sole discretion, order Licensee to stop work as appropriate. PECO will give such order and notice in such manner as is practicable under the circumstances.

5.0 APPLICATION FOR ATTACHMENTS AND MODIFICATIONS.

5.1. Licensee shall submit an Application to PECO for the attachment of any and all proposed Equipment to PECO Poles or the Modification of any and all such Equipment and shall specify therein the kind of Attachment sought and the date proposed for such Attachment, a detailed description of the Equipment, the number of Attachments that are included as part of the Equipment, the proposed Modification, if any, to the Equipment and the location of the affected PECO Poles. Each Application for a Wireless Attachment shall indicate the Global Positioning Satellite coordinates for the pole to which Licensee wishes to attach. Each Application shall be accompanied by Licensee's payment of an Application Fee in the amount specified in the Application form.

5.2. Each Application for a Wireless Attachment shall detail the technical specifics of Licensee's proposed Equipment, including but not limited to Licensee's engineering plans stamped by a professional engineer, an analysis of the structural integrity of PECO's facilities in light of the Licensee's proposed attachments thereon, and Licensee's proposed frequency.

5.3. Licensee shall evaluate the possibility of radio or frequency interference (for purposes hereof, "interference") between its Equipment and other existing uses on PECO's property. As part of its Application, Licensee shall, at Licensee's sole cost and expense, perform an intermodulation analysis, including all frequencies at the Site, and submit a copy to PECO as evidence of non-interference. Licensee may, from time to time, re-utilize previously prepared intermodulation studies if such re-utilization is reasonable under the circumstances and such studies analyze the same frequencies as those involved at the subject Site. Licensee's execution of a Permit shall signify its determination that the existing uses will not cause interference to its Equipment, provided such existing uses and Licensee's Equipment are properly and lawfully installed and operated. If Licensee's Equipment interferes with any lawful use existing prior to the execution of the Permit, or if Licensee's Equipment causes measurable interference, as defined by the FCC, to PECO, or to other lawful users of PECO's property or distribution system with respect to those uses existing prior the execution of the Permit, Licensee agrees to take all steps necessary to immediately correct and eliminate the interference. Notwithstanding any other provisions in this Agreement, if Licensee fails to correct and eliminate such interference within forty-eight (48) hours of notice thereof, PECO shall have the option (but not the obligation) to require Licensee to cease all operations until such interference is corrected or eliminated and shall have the right (but not the obligation) to engage outside consultants, at Licensee's expense, to resolve interference issues. Following the installation of Licensee's Equipment, Licensee shall, at its own expense, if requested to do so by PECO, prepare and conduct an evaluation of the potential for interference, whether upon PECO's own behalf or as a result of concerns expressed to PECO by a third party.

5.4. Licensee agrees that the uninterrupted operation of PECO's Facilities and the provision of electricity to its customers are of paramount importance hereunder and, therefore, any mitigating interference that may be caused to Licensee's Equipment by PECO's Facilities exiting or future shall be solely Licensee's responsibility and accomplished solely at the expense of Licensee. Licensee shall eliminate such interference by adjustment to its Equipment or by termination of the applicable Permit. Under no circumstances shall PECO be required to interrupt, suspend or alter its uses of the PECO's Facilities in order to accommodate the Licensee or its rights granted hereunder, unless such interruption, suspension or alteration will not materially affect PECO's operations.

5.5. Unless otherwise agreed by PECO and Licensee, each Application submitted by Licensee to PECO for the attachment of proposed Equipment to PECO Poles or the Modification of such Equipment shall not exceed, in total, attachments to more than 50 PECO Poles.

5.6. Licensee shall have the right to accompany PECO, or a PECO designated contractor, on all pre-construction Pole walks scheduled by PECO to determine the nature and extent of required Make Ready work related to the proposed attachment of Licensee's Equipment to PECO Poles as set forth in the Application.

5.7. Upon receipt of Licensee's Application, PECO will perform a survey, pole loading analysis for Wire Attachments and engage in all engineering and administrative activities necessary to determine whether the requested attachments can be made or grounds exist for denying an application ("Technical Review"). Licensee shall reimburse PECO for any and all actual and reasonable costs, fees, expenses or other liabilities incurred by PECO in preparation and completion of the Technical Review undertaken by PECO in processing an Application (collectively, "Permit Processing Expenses"). Licensee shall pay PECO in advance, the estimated Permit Processing Expenses. If the actual Permit Processing Expenses incurred are greater than the estimated amounts paid by Licensee to cover those costs, Licensee shall be liable to

PECO for the excess cost. If the Permit Processing Expenses actually incurred are less than the estimated amounts paid by Licensee, PECO shall reimburse or credit Licensee in the amount of the overpayment.

5.8. Unless the Application is denied, PECO will indicate on the Marked-Up Application the Make Ready work necessary to accommodate the proposed attachment of Licensee's Equipment or the proposed Modifications and the estimated Cost of such Make Ready work. PECO will also specify on the Marked-Up Application any special conditions that will govern the proposed Modifications or the placement of Licensee's Equipment on PECO Poles.

5.9. If, after receiving the Marked-Up Application, Licensee still desires to have its Equipment placed on PECO Poles or to implement the proposed Modifications under the terms and conditions indicated on the Marked-Up Application, Licensee shall accept such terms and conditions by signing the Marked-Up Application and returning the same to PECO within ten (10) business days after delivery by PECO, together with payment in full of the estimated Make Ready Cost shown on the Marked-Up Application and applicable fees as set forth in Article 11.0.

5.10. PECO will cause Make Ready work on PECO's facilities, if any, identified in the Marked-Up Application to be scheduled and performed in accordance with this Article and Article 7. PECO will provide License with a preliminary schedule for the work under each Application (which may not request or identify attachments to more than 50 Poles) as soon as reasonably practicable. As to each Application, once a preliminary schedule has been provided to Licensee, PECO will use commercially reasonable efforts to provide Licensee with such updated schedules as may from time to time exist. PECO will notify Licensee upon completion of such Make Ready work and issue a Permit authorizing the attachment, Modification or removal of Licensee's Equipment pursuant to the Marked-Up Application and subject to the terms and conditions set forth therein.

5.11. Notwithstanding the foregoing, at Licensee's option, or at PECO's option, PECO shall engage a qualified electrical contractor approved by PECO to perform the Make-Ready work at Licensee's sole cost and expense.

6.0 ATTACHMENT OF EQUIPMENT TO PECO POLES.

6.1. After completion of the Application process, provided the Attachments are not in or above the so-called "neutral" space above the communications space, Licensee shall, at Licensee's sole cost and expense, attach the Equipment to the designated PECO Poles or make any Modifications in accordance with (a) the terms and conditions of the Marked-Up Application, (b) PECO's then-current Standards and Specifications, (c) all applicable laws, statutes, ordinances, rules and regulations imposed by any governmental entity with jurisdiction over the construction, operation, use, maintenance, repair, replacement or removal of the equipment, PECO Poles or other facilities thereon, as amended from time to time and (d) subject to PECO's right to permit attachments under applicable easements or licenses. Licensee will follow the procedures for a new PECO energy delivery customer necessary to activate the Equipment for use in their designated purpose. Licensee shall have the right to accompany PECO on any post-construction inspections scheduled by PECO to determine Licensee's compliance with the terms and conditions of this Agreement and the Marked-Up Application. PECO shall provide Licensee with sufficient notice prior to any such post-construction inspection. Licensee shall pay when billed for all reasonable Costs incurred by PECO in conducting any such post-construction inspections. No devices for the purpose of metering energy consumption may be attached to PECO Poles. It shall be the sole responsibility of licensee to obtain necessary easements or rights-of-way or other permits or approvals to enable Licensee to install, operate and maintain Licensee's equipment. If the Attachments are in or above the neutral space, Licensee shall cause a qualified electrical contractor approved by PECO to perform the installation of any and all Equipment, at Licensee's sole cost and expense, in accordance with the terms of Section 6.1 hereof.

6.2. All Equipment shall be clearly labeled at each pole location with Licensee's name and a telephone number where a representative of Licensee can be reached, twenty-four (24) hours a day, seven (7) days a week, to receive reports of problems with the Equipment. Licensee shall investigate all such reports in a timely manner and perform all necessary repair and maintenance to remedy such problems.

6.3. PECO shall cause bonding of Licensee's Facilities to be made to PECO'S multi-grounded neutral system in accordance with PECO's specifications. PECO will schedule such work in a manner that permits the work to be completed without conflict or interference with PECO's prior work commitments and regular business operations. Licensee shall pay PECO in advance for the Cost of the required bonding as determined and performed by PECO.

6.4. Placement or attachment of any Licensee's Equipment at a new or different position on any PECO Pole shall, in each instance where such placement or attachment has not been specifically approved by a prior Permit, constitute a Modification requiring the submission of a new Application and Permit. This requirement does not apply in circumstances where Licensee places or attaches any of Licensee's Equipment at a new or different position on any PECO Pole at the request of a third party Licensee as part of that third party Licensee's make-ready work necessary to attach its Equipment to the PECO Pole.

7.0 COST AND SCHEDULING OF MAKE READY

8.0 MAINTENANCE AND REPAIR

8.1 PECO will maintain, repair or replace PECO Poles as necessary to fulfill its own service requirements and as required by law. PECO is not required to maintain any PECO Poles for a period longer than is necessitated by its own service requirements. In the event that PECO determines that it will no longer maintain a PECO Pole upon which any Equipment is attached, PECO will send Licensee sixty (60) days written notice that it will no longer maintain the PECO Pole. In such event, PECO may, in its sole discretion, offer Licensee alternative space on another PECO Pole for the Equipment, provided that such alternative space and PECO Pole is available.

8.2 Licensee shall, at its sole cost and expense, maintain its Equipment in good and safe condition and repair in accord with PECO's Standards and Specifications and in compliance with all applicable law, statutes, ordinances, rules and regulations, as referenced in Article 6.1 herein, including FCC regulations, governing the maximum permitted levels of radio frequency energy exposure ("MPE"). Licensee agrees to maintain its Equipment in such a manner so as not to endanger or interfere with the use of PECO Poles by PECO or others granted a right to attach to said PECO Poles. Upon receipt of any notice from PECO or any court or governmental entity that any Equipment of Licensee is interfering with or endangering any person, equipment, property or facilities of PECO or any other party including the general public by exceeding MPE or otherwise. Licensee agrees that it will, at is sole cost and expense, immediately take all necessary steps to remedy such danger or interference. In the event Licensee fails to remedy such danger or interference within forty-eight (48) hours after notice thereof from PECO or any court or government entity, PECO will take all actions it deems necessary or appropriate to remedy such matter, including without limitation the removal from PECO Poles of any Equipment causing such danger or interference. PECO shall have no liability of any kind or nature whatsoever for any actions taken by PECO to remedy such danger or interference and, unless such liability is caused by PECO's sole negligence or willful misconduct, Licensee shall pay PECO upon demand for all Costs of such activities. License shall pay the cost of testing Licensee's Wireless equipment for compliance with MPE by independent experts approved by PECO, as PECO may direct from time to time.
Notwithstanding the foregoing, a qualified electrical contractor approved by PECO, and not Licensee, will, at Licensee's sole cost and expense, perform all maintenance, repair and removal work on any of Licensee's Equipment located within or above the neutral space on PECO Poles.

8.3 Nothing contained in this Agreement shall be construed as a limitation, restriction or prohibition on PECO with respect to any agreement or arrangement PECO has heretofore entered into or may enter into in the future with respect to any PECO Poles. In no event will PECO be liable for any noise, inducted voltages, currents or other interference affecting any of Licensee's Equipment, unless caused by PECO's sole negligence or intentional misconduct. Except for the Make-Ready work expressly described

in the Marked-Up Application, Licensee hereby acknowledges and agrees that PECO has not agreed to undertake any alterations or improvements to make the PECO Poles suitable for Licensee's intended use and that Licensee hereby accepts use of the PECO Poles in their AS-IS WHERE-IS CONDITION, WITH ALL FAULTS.

9.0 REMOVAL, REPLACEMENT OR RELOCATION.

9.1 In the event Licensee wishes to remove any of its Equipment from any PECO Poles, Licensee shall submit to PECO a notice of removal in the form attached hereto as Exhibit "C" describing the location, number and type of Facilities to be removed. PECO will review the Notice of Removal and identify thereon any special conditions governing Licensee's removal of the subject Equipment. Upon Licensee's acceptance and return of the Notice of Removal, PECO will issue a Permit authorizing such removal. No refund of any fees or charges previously paid to PECO shall be made as a result of such removal. Licensee shall notify PECO in writing within ten (10) days after the completion of such removal work, and no adjustment in future fees due and payable by Licensee hereunder pursuant to Article 11 shall be made until PECO has received such notice of completion from Licensee and has had an opportunity to field verify the number of PECO Poles from which Licensee's equipment have been removed. If the Attachments to be removed are in or above the neutral space, Licensee shall cause at Licensee's expense a qualified electrical contractor approved by PECO to undertake the removal of any and all of Licensee's Equipment.

9.2 In the event that notice is provided by a governmental body that Licensee's use of any PECO Pole hereunder is in violation of any municipal, state or federal law, statute, ordinance, rule or regulation, over which said governmental entity has jurisdiction, or is not authorized by permit, license or other approval required from any governmental body, or in the event notice is provided by a property owner of such violation or authorized use. PECO may elect, in its sole discretion by written notice to Licensee, to revoke any Permit given under this Agreement authorizing Licensee's use of said PECO Pole, such revocation to be effective upon the sixtieth (60th) day following the date of such notice. In the event PECO elects to revoke such Permit, Licensee shall remove the subject Equipment, at Licensee's sole cost and expense, within sixty (60) days from the date of PECO's revocation notice. If, however, the governmental entity or property owner providing notice of such violation or unauthorized use requires removal within less than the sixty (60) day time frame, then Licensee shall perform such removal within the time frame set or required by said entity. In the event Licensee fails to perform any such removal, PECO may, in its sole discretion, and at the sole cost and expense of Licensee, perform such removal without incurring any liability of any kind or nature whatsoever to licensee, its customers, affiliates, parents, owners or subsidiaries. However, upon written request from the Licensee, PECO shall permit the Licensee to continue to maintains its Equipment on such Pole or Poles until the Licensee exhausts its legal remedies with respect to the governmental determination, or the claim of the property owner or joint owner of the Pole, provided the Licensee: (i) promptly and diligently prosecutes such legal remedies or defends against the actions of the governmental or private agency, or the property owner seeks such stays, injunctions and protective orders as may be warranted: (ii) provides adequate protection, in the judgment of PECO, to protect PECO, other owners and other Licensees from loss due to the determination; and (iii) promptly removes its Equipment in the event the Licensee's action or defense is dismissed, decided or compromised unfavorably to Licensee, the stay or injunction is denied, or the protection of the stay or injunction becomes inadequate.

9.3 In the event of any emergency that threatens persons or property, PECO may, in its sole discretion, without prior notice, remove or relocate any of Licensee's Equipment. Such removal or relocation shall be at Licensee's sole cost and expense. PECO will give notice subsequent to PECO's removal or relocation of Licensee's Equipment as soon as practicable under the circumstances.

9.4 In non-emergency situations, if PECO determines that its electric service or operating requirements or considerations of safety, reliability, and engineering, or the need to make ready for

another third party attacher (relocation only), require the removal, relocation, or replacement of any of Licensee's Equipment, Licensee shall, at its sole cost and expense, effect such removal, relocation, or replacement within sixty (60) days after receipt of such written notice from PECO. If Licensee fails to perform such removal, relocation, or replacement within sixty (60) days after the receipt of such written notice from PECO, License shall pay for any expenses PECO incurs as a result of a return trip made necessary by Licensee's failure to perform the required removal, relocation, or replacement within the Licensee's failure to perform the required removal, relocation, or replacement within the sixty (60) day period. Also, if Licensee fails to perform such removal, relocation or replacement within said sixty (60) day period, PECO may, in its reasonable discretion, and the sole cost and expense of Licensee, perform such removal, relocation or replacement without incurring any liability of any kind or nature whatsoever to Licensee, its customers, affiliates, parents, owners or subsidiaries, unless caused by PECO's sole negligence or willful misconduct. Licensee also may request that it transfer any of its Equipment to any available substitute PECO Pole, at Licensee's sole cost and expense, which request may be approved or denied by PECO in its reasonable discretion.

9.5 As provided in Article 14.4, Licensee shall completely remove its Equipment from PECO's Poles no more than ninety (90) days after the termination of the Agreement, unless the parties have executed a new agreement covering the PECO Poles hereto. As also provided in Article 14.4, if Licensee fails to remove its Equipment within the required time, PECO may remove Licensee's Equipment, at Licensee's expense, from PECO's Poles and without any liability to PECO unless such liability is caused by PECO's sole negligence or willful misconduct. If the Equipment to be removed is in or above the neutral space, Licensee shall cause at Licensee's expense a qualified electrical contractor approved by PECO to perform any removal, relocation or replacement work on any of Licensee's Equipment.

10.0 PECO FACILITIES.

Licensee covenants and agrees (as a specific condition of this Agreement) that Licensee and Licensee's agents, contractors, employees, invitees, and customers will not, under any circumstances whatsoever, touch handle, tamper with or contact directly or indirectly, any of PECO's Facilities other than the PECO Pole, without the express written consent of PECO, which consent PECO may withhold in its sole and absolute discretion. Licensee covenants and agrees that PECO shall not be held responsible for, and PECO is hereby expressly relieved from all liability by reason of injury (including death) or damage of any nature whatsoever to Licensee, or to its agents, contractors, employees, invitees, customers and others who are on the PECO Poles under, through or by the authority of Licensee, or to property in, upon or about the PECO Poles, except if such liability results from the sole negligence or willful misconduct of PECO. Licensee further hereby releases and waives any right to ask for and demand damages of any nature or kind for any matter or thing, however caused. In the event of a casualty or loss which results in the damage or destruction of PECO's Facilities to which Licensee's Equipment is attached or located, PECO shall have no obligation hereunder to rebuild or restore the PECO's Facilities; provided that in the event that PECO electors not to rebuild or restore PECO's Facilities, the Permit in question shall immediately terminate. PECO reserves the right to make periodic inspections of the entire plant of Licensee located on PECO Poles, or a portion of that plant, as often as conditions warrant. If PECO determines that corrections or changes need to be made in order to meet the National Electrical Safety Code or PECO's service or operating requirements, including, but not limited to considerations of economy and safety, Licensee agrees that it will cause such corrections or changes to be made at its own expense, in a timely manner. Licensee shall reimburse PECO for the cost of any damage to PECO Poles or PECO Facilities caused by Licensee or its contractors within thirty (30) days of receipt of a bill therefor.

11.0 COMPENSATION.

12.0 LIABILITY AND INDEMNIFICATION

12.1 Notwithstanding any permission granted by PECO pursuant to any Application, Marked-up Application or Permit issued hereunder, PECO retains the right to maintain, replace, relocate and remove PECO Poles and to maintain, replace, relocate, remove and operate its facilities in such manner as it deems necessary or appropriate to fulfill its own service requirements. Accordingly, PECO shall not be liable to licensee, any customer of Licensee, any affiliate of Licensee, or any other person or entity, for any interruption of service or for any interference with the operation of the Equipment arising in any way out of PECO's use, operation, maintenance, repair, removal or relocation of its poles or equipment in connection with PECO's own business needs and requirements, unless such liability is caused by the sole negligence or willful misconduct of PECO in its performance of such activities. Without limiting the generality of the foregoing, PECO will not be liable for any noise, induced voltages, currents or other interference in Licensee's Equipment.

12.2 Licensee agrees to defend and hold harmless PECO, its parent company, Exelon Corporation, and their respective affiliates, directors, officers, employees, shareholders, agents, contractors, subcontractors, successors and assigns (the "Indemnitees", from and against any and all

claims, demands, actions, causes of action, liabilities, judgments, obligations, costs or expenses for any damage to property, or for injury to or death of any person or persons, or any other costs or expenses, including without limitation reasonable attorneys' fees and costs, related to, arising out of or connected with the placement, use, operation, repair, Modification or removal of any of Licensee's Equipment; provided, however, that Licensee shall have no obligation hereunder to indemnify any Indemnitees from their sole negligence or willful misconduct. The foregoing indemnification shall include, but not be limited to, claims made under any worker's compensation law or under any plan for employee's disability and death benefits (including, without limitation, claims and demands that may be asserted by employees, agents, contractors, and subcontractors). Licensee shall immediately notify PECO of any such claims, demands, damages, injuries or deaths, and shall provide a written report, or other pertinent material or information, if requested. Licensee shall defend the Indemnitees with counsel reasonably acceptable to PECO.

12.3 Licensee agrees to indemnify PECO against any and all claims and demands for damages or losses resulting from any interruption of PECO's service, the service of Licensee, or the service of PECO's or Licensee's customers, if such interruption in services arises out of or is caused by the exercise by Licensee of the permission granted by PECO under this Agreement.

12.4 Licensee agrees to pay the costs incurred by PECO to upgrade or replace PECO Poles to which Licensee's Equipment is attached if the upgrade or replacement is required solely by the addition or Modification of Licensee's Equipment. Licensee shall pay its proportionate share of the costs incurred by PECO to modify, upgrade or replace PECO Poles if the modifications, upgrades or replacements directly benefit Licensee and other attachers to such PECO Poles and are made to meet the PECO service needs, are made at the request of Licensee or an additional attaching party or are made as a result of governmental order or regulation.

12.5 At all times, Licensee shall conduct its operations and otherwise use or occupy PECO Poles hereunder in compliance with all applicable Environmental Laws and shall not cause any Hazardous Materials to be introduced to or handled on or about PECO Poles, hereunder. Licensee hereby indemnifies and shall defend and hold harmless PECO and all other indemnitees from and against any suits, damages, injuries, costs and expenses of any kind including, without limitation, court costs, reasonable attorney and consultant fees, remediation costs, fines and penalties, whether asserted under Environmental Laws or at common law, arising out of or related to (a) any breach by Licensee of the environmental Laws; or (c) the presence, release or threatened release or threatened release of any Hazardous Materials at, on or about PECO Poles hereunder caused by Licensee, its agents, employees, contractors, or any entity in privity with or providing a benefit to Licensee; provided, however, that Licensee shall have no obligation to so indemnify any Indemnitee from such Indemnitee's own negligence or misconduct. The foregoing covenants and indemnification obligations shall survive any termination of this Agreement.

12.6 Neither party shall have any liability to the other under this Agreement or otherwise for special, punitive or consequential damages, including without limitation, damages for lost profits or business interruption.

12.7 Licensee's duties and obligations to indemnify PECO and the other Indemnitees under this Article 12 shall survive any termination of this Agreement.

13.0 INSURANCE AND BOND.

13.1 Licensee shall purchase and maintain, and shall require each contractor and subcontractor performing any work on behalf of Licensee pursuant to this License to purchase and maintain (or Licensee may, at its option, purchase and maintain, at its own cost, on behalf of each such

contractor or subcontractor), prior to commencing any work on the PECO Poles or any of PECO's other property, the following insurance coverages:

13.2 Workers' Compensation Insurance Policy: Coverage A providing payment promptly when due of all compensation and other benefits required of the insured by the workers' compensation law; Coverage B Employers' Liability providing payment on behalf of the insured with limits of each accident/occurrence, policy limits for all sums which the insured shall become legally obligated to pay as damages because of bodily injury by accident or disease, including death at any time resulting therefrom, Coverage A and Coverage B will cover all contractors, subcontractors, and their subcontractors.

13.3 Commercial General Liability Policy or Polices (with coverage consistent with ISO from CG 0001 (04/13) covering all contractors, subcontractors (including by not limited to coverage for claims against PECO for injuries to employees of such contractors or subcontractors) and all their subcontractors with limits of for bodily injuries to or death of one or more persons and/or property damage sustained by one or more organizations as a result of any one occurrence and in the aggregate, with policy or policies shall not exclude property of PECO. PECO Energy Company shall be added as Additional Insured under endorsement GL 2010 or CG 2010 or such other customary endorsement(s) as may be available at commercially reasonable rates. Bodily injury means bodily injury, sickness, or disease sustained by any person which occurs during the policy period, including death, at any time resulting therefrom. Property damage means (1) physical injury to or destruction of tangible property which occurs during the policy period, including the loss of use thereof at any time resulting therefrom, or (2) loss of use of tangible property which has not been physically injured or destroyed provided such loss of use is caused by an occurrence during the policy period.

Automobile Liability in the amount of per occurrence combined single limit covering all owned, leased, rented and non-owned vehicles.

There shall be furnished to PECO, prior to commencing the work of installing, repairing, replacing or removing the Licensee's Equipment, a Certificate of Insurance evidencing the coverage specified in Subsections (13.2), (13.3) and (13.4) of this Section. Insurance coverage as required herein in Subsections (13.2), (13.3) and (13.4) shall be kept in force until all of Licensee's Equipment has been removed from PECO's Poles. PECO hereby reserves the right to amend, correct and change, once per Term in its commercially reasonable discretion, the limits, coverage as may be required from Licensee's contractor or contractors before entering onto the PECO Pole or PECO's other property to perform any work thereon.

All insurance policies required by this Section shall be issued by good and reputable companies having a Best's Rating of A-VII or better. Licensee shall provide thirty (30) days prior written notice of any substantial change in the coverage, cancellation or non-renewal . Policies of insurance that are renewed by Licensee on a regular basis shall not be subject to the written notice requirement described herein. Any required policies of insurance maintained by Licensee, its contractors or subcontractors, shall be primary without right of contribution or offset from any policy of insurance or program of self-insurance maintained by PECO. Licensee may, in lieu of obtaining insurance policies from third parties, furnish the insurance required of it hereunder through a commercially reasonable self-insurance program, subject to the approval of PECO (which approval shall not be unreasonably withheld, conditioned or delayed so long as the demonstrated claims paying ability and financial resources of such program equal or exceeded those of insurance companies having Best's Ratings equal to that described above). Licensee and PECO agree and shall require each of their respective contractors and subcontractors to agree that they shall each arrange for the issuers of all policies of insurance to waive their rights of subrogation against PECO or Licensee (as the case may be) and their respective directors, officers, employees and agents. Prior to the date of this Agreement and within ten (10) days prior to each anniversary of the date of this

Agreement occurring during the team hereof, Licensee shall furnish PECO with certificates of insurance evidencing Licensee's compliance with the requirements of this Section.

13.4 Bond or Letter of Credit.

14.0 DEFAULT, TERMINATION AND OTHER REMEDIES.

14.1. Breach of Representations or Warranties. Either party may terminate this Agreement upon the discovery of a breach by the other party of one or more of the representations or warranties set forth in Article 16 of this Agreement.

14.2. Other Breaches. Licensee agrees that PECO may terminate this Agreement upon the discovery of one or more of the breaches of this Agreement identified in this Article 14.2(14.2-14.2.5).

14.2.1. Failure to Notify of Assignment. Licensee shall be in breach of this Agreement if it fails properly to notify PECO in writing, and to obtain PECO's prior written consent of any assignment of this Agreement where Article 15.0 requires such notice and consent.

14.2.2. Bankruptcy or Insolvency. Licensee shall be in breach of this Agreement if it fails to make a payment or is at risk of failing to make a payment because it (a) makes any general assignment for the benefit of creditors; (b) initiates or is the subject of a request to initiate a bankruptcy or insolvency proceeding under any provision of law, including the United States Bankruptcy Code; (c) files or is the subject of a filing for the appointment of a receiver; or (d) is rendered or declared insolvent as defined by applicable law.

14.2.3. Failure Materially to Comply. Licensee shall be in breach of this Agreement if Licensee fails materially to comply with any of the provisions of this Agreement to be performed or observed by Licensee or uses the Equipment for purposes other than those specified herein, and such breach continues without cure (a) for thirty (30) days after written notice from PECO for any monetary defaults; or (b) for the period of time specified in any default notice issued by PECO for any emergency posing an immediate safety risk of loss, injury or damage; or (c) for sixty (60) days for any other type of default.

14.2.4. Loss of Franchise. Licensee shall be in breach of this Agreement if at any time Licensee loses its operating authority, whether as a result of an action by any appropriate governmental entity, applicable law, or otherwise, to use the public streets or highways.

14.2.5. Failure to Act on Agreement. Licensee shall be in breach of this Agreement should Licensee not place Equipment on PECO's Poles within twelve (12) months of the effective date of the Agreement. If Licensee fails to place Equipment on those PECO poles for which a Permit has been granted by PECO within ninety (90) days of the receipt of that Permit from PECO, the Permit shall be

cancelled unless such delay is due solely to PECO's failure to perform or PECO otherwise delays Licensee's ability to perform.

14.3. Rights and Remedies for Breach. In the even Licensee shall be in breach of this Agreement and such breach continues beyond any applicable cure period provided herein, PECO may exercise any one or more of the following rights and remedies: (a) terminate this entire Agreement or terminate any Permit or Permits given pursuant to this Agreement; (b) take any and all corrective action PECO deems necessary or appropriate to cure such default and charge the cost thereof to Licensee, together with interest at the Default Rate (ii) an administrative charge in an amount equal to twenty percent (20%) of the cost of the corrective action, such payment to be made by Licensee upon PECO's presentment of demand therefor; (c) stop processing applications for new Attachments or (d) exercise any other remedy available to PECO under this Agreement or at law or in equity.

14.4. Upon Termination of any Permit, Licensee shall have ninety (90) days to remove its Equipment from the affected PECO Poles and upon termination of the entire Agreement, Licensee shall have ninety (90) days to remove its Equipment from PECO's Poles. PECO shall have the right, upon notice to Licensee, to remove all of Licensee's Facilities and Power Supplies from the PECO Poles to which the Permit applies or from all of PECO's Poles where the entire Agreement has been terminated if Licensee fails to remove its Equipment within the specified time. Licensee shall pay PECO for all Costs of such removal within ten (10) days after billing, PECO shall deliver the Equipment to a location given by Licensee or stipulated by PECO without incurring any liability for the condition of the Equipment, or for any other loss, damage or casualty, of any kind or nature whatsoever, incurred or alleged to have been incurred by Licensee arising out of resulting from the removal of the Equipment.

14.5. Duties and Obligations Remain. In the even that Licensee is in default or in breach under this Agreement and PECO elects to terminate Permits granted under this Agreement or the Agreement itself, in whole or in part, or upon any other cause of termination of this Agreement, Licensee shall not be relieve of any of its duties or obligations under this Agreement, so long as any equipment remains on any PECO Pole.

15.0 ASSIGNMENT.

15.1. Licensee may not assign or transfer all or any portion of its rights, privileges or obligations under this Agreement without written notice to and the prior written consent of PECO, which consent will not be unreasonably withheld, except that Licensee may assign or transfer its rights, privileges and obligations to a parent, affiliate or subsidiary company without prior written notice to PECO. In addition, Licensee may assign its rights, privileges and obligations to any entity that succeeds to all of substantially all of its assets, whether by merger, sale, or otherwise, but only with prior written notice to PECO and subject to the requirements that Licensee shall either (a) demonstrate to PECO that (i) the successor entity has a credit rating with any two of Standard & Poor's, Moody Financial Services or Fitch IBCA which is equal to or superior than the credit rating with such services that Licensee has at the time of such proposed assignment; or (ii) if the successor entity is not rated by any two of the foregoing credit rating services, then Licensee shall demonstrate to PECO, in the commercially reasonable exercise of PECO's judgment that the successor entity has credit worthiness comparable to the creditworthiness of Licensee. Licensee agrees that PECO may, as a condition precedent to granting consent for an assignment or transfer, require negotiation of the fees set forth in Article 11 of this Agreement or of the insurance and bond requirements set for thin Article 13 of this Agreement, unless the assignment or transfer is to Licensee's parent, affiliate or subsidiary, or unless the assignment or transfer is to non-affiliated entity that succeeds to all or substantially all of Licensee's assets and meets the creditworthiness standards set forth above. Licensee shall give PECO not less than sixty (60) days' prior written notice of any proposed assignment or transfer.

15.2. The obligations of Licensee under this Agreement (but, except as otherwise provided in Article 15.1 hereof, not Licensee's rights and privileges hereunder) shall extend to and be binding upon any successors or assigns of Licensee. All right, title and interest of PECO hereunder shall be binding upon an issue to the benefit of PECO's successors and assigns.

15.3. Nothing herein shall be deemed to restrict or limit PECO's right to assign all or any portion of its right, title or interest in this Agreement.

16.0 REPRESENTATIONS AND WARRANTIES.

16.1. Power and Authority. Each party represents and warrants that (a) it is a corporation duly organized, validly exiting and in good standing in its state of organization, (b) it is qualified to do business (if a foreign corporation) under the laws of the Commonwealth of Pennsylvania, and (b) it has full power and authority to enter into this Agreement and undertake the responsibilities and obligations contemplated by it in accordance with its terms.

16.2. Enforceability. Each party represents and warrants that this Agreement constitutes a valid and binding obligation of such party and is enforceable against such party in accordance with its terms and conditions. Each party further represents and warrants that it has independently reviewed this Agreement, including the charges set for thin Article 11, and concluded that this Agreement is just, reasonable and equitable.

17.0 FORCE MAJEURE.

Neither party shall be liable for any delay in performance or inability to perform any non-monetary obligations hereunder if such delay or inability is due to acts or omissions which are not voluntary by such party and beyond such party's reasonable control, including, but not limited to, acts or omissions of any governmental body, civil disturbance, acts of terrorism, war, fires, acts of nature, labor disputes, shortages of materials and equipment, or the acts of omissions of the other party.

18.0 MISCELLANOUS.

18.1. Merger. All understandings and agreements, oral or written, hereto fore made by and between the parties hereto are merged into this Agreement. This Agreement, and the exhibits attached hereto, alone fully and completely expresses the agreement between PECO and Licensee with respect to the subject matter hereof.

18.2. Waiver of Terms or Conditions. The failure of PECO or Licensee to enforce or insist on Compliance with any of the terms or conditions of this Agreement shall not constitute a waiver or relinquishment of any right to seek enforcement of such terms or conditions. The acceptance of payment by PECO of any of the fees or charges set forth in this Agreement shall not constitute a waiver of any breach, default or violation of the terms or conditions of this Agreement. No waiver of any breach of this Agreement shall be held to constitute a waiver of any other or subsequent breach.

18.3. Severability. If any clause, phrase, provision or portion of this Agreement or the application thereof to any person or circumstances otherwise shall be held to be invalid or unenforceable under applicable law by any court or governmental body having jurisdiction, such invalidity or unenforceability shall not affect, impair or render invalid or unenforceable any other provision of this Agreement, nor shall it affect the application of such clause, phrase, provision or portion hereof to any other person or circumstances. In the event any provision of this Agreement is so found to be invalid or unenforceable, the parties agree to amend this Agreement by replacing the invalid or unenforceable term with such other provision as will give the fullest possible effect, within the limits of applicable law, to the

intention and understandings of the parties as set forth in this Agreement. Notwithstanding the foregoing, in the event that any of the terms and conditions contained in Article 13 hereof are determined by a court or governmental body having jurisdiction to be invalid or unenforceable in any material respect, then, at PECO's option, this Agreement shall be terminated and, in such event, the Parties will use commercially reasonable efforts to reach a new Agreement. If a new Agreement is not reached within sixty (60) days following the termination, then PECO shall have the right to remove all of Licensee's Facilities and Power Supplies from any or all of the PECO Poles in the manner provided by hereinabove with respect to the termination of this Agreement.

18.4. Notice. Unless otherwise directed, all notices required to be given by either party to the other party under this Agreement shall be in writing and shall be deemed sufficient if given in any of the following ways: (a) delivery by a messenger service or commercial courier providing same or next day delivery, or (b) sent by United States Certified Mail, return receipt requested, postage prepaid to the parties at the addresses set forth herein below. With respect to notification of completion of Make-Ready work (Article 5.6), notice of interference or endangerment (Article 9.2), notice of emergency action (Article 9.3), or such other notice requirements as PECO and Licensee may agree from time to time to treat as follows, notice may first be made by telephone call or e-mail to the person or persons specified below, to be followed within a reasonable time by a confirmation notice in writing as above directed above.

If to PECO Energy Company

2301 Market Street
Philadelphia, PA 19103
Attn: Manager: Real Estate & Facilities

If to New Cingular Wireless PCS, LLC

By U.S. Postal Service or Overnight Courier

AT&T Network Real Estate Administration
575 Morosgo Drive
Atlanta, GA 30324

With a copies to:
By U.S. Postal Service or Overnight Courier

AT&T Legal Department- Network
Attn: Network Counsel
208 S. Akard Street
Dallas, Texas, 75202-4206

AT&T Mobility
Attn: Lease Administration — Mail Drop 370
200 North Warner Road
King of Prussia, PA 19406

18.5. Agreement to do all Things Necessary or Appropriate. Both parties agree to do all things necessary or appropriate from time to time, including the execution and delivery of such ancillary documents and agreements as PECO may reasonably require to carry out the express terms and conditions of this Agreement and the intentions and understandings of the parties as described herein.

18.6. No Partnership or Joint Venture Created. The parties acknowledge and agree that this Agreement does not create a partnership between, or a joint venture of, PECO and Licensee. PECO and Licensee are each independent contractors and nothing contained in this Agreement shall be construed to constitute either party an agent of the other.

18.7. Revision of Forms. The forms attached hereto are subject to revision by PECO at any time and at its discretion.

18.8. Counterparts. This Agreement may be executed using counterpart signature pages.

(Continued next page)

IN WITNESS WHEREOF, the parties to this Agreement by their duly authorized representatives have executed this Agreement to be effective as of the day and year first written above.

PECO ENERGY COMPANY

APPROVED
AS TO FORM

By:

Benjamin E. Henry, Manager, Real Estate & Facilities

New Cingular Wireless PCS, LLC
By AT&T Mobility Corporation, its Manager

By:

JOHN GREEN, Area Manager

6/6/18

EXHIBIT A

APPLICATION

APPLICATION FOR ATTACHMENT TO PECO ENERGY POLES

DATE OF APPLICATION: _____

DO YOU HAVE A SIGNED POLE ATTACHMENT AGREEMENT ON FILE WITH PECO ENERGY? Y/N

NAME OF COMPANY OR INDIVIDUAL

_____

MUNICIPALITY:_____

GPS Address:_____

FACILITIES:

PURPOSE: ( )

Voice ____ Audio/Video
Data

Other_____(specify)_____

APPLICATION FEE ENCLOSED: $_____

Over Fifty (50) Poles a application be submitted

POLE RENTAL BILLING ADDRESS (IF DIFFERENT FROM ABOVE)

Instructions For Application

(A) Read and complete the entire Application and sign in the appropriate places.

(8) Enclose a list of the poles or duct locations (or both) along with a check for the required Application and Deposit Fees as indicated above to:

PECO ENERGY COMPANY
Attn: Manager

Real Estate and Facilities, N3-3
2301 Market Street
Philadelphia, PA 19103

GENERAL INFORMATION

Concerning The Application Process

(1) Upon receipt of this application, the request will be forwarded to the appropriate location for an ENGINEERING and SURVEY review.

(2) You will be supplied with a cost for our ENGINEERING and SURVEY to review the request. This cost will vary with the complexity of the request. You will be required to pay this cost whether or not you elect to proceed with the request.

(3) If PECO facilities need to be relocated to accommodate your request, you will be supplied with a cost for MAKE READY, which you will be required to pay if you elect to continue with the request.

(4) The invoice for the cost of ENGINEERING and SURVEY will be due and payable upon receipt. Invoices outstanding for more than 30 days will be declared delinquent and no additional applications will be accepted until the invoice is paid in full. Advance deposits will be credited to cost of engineering/survey with excess, if any, applied to make-ready work, if applicable.

(5) After receiving the invoice for the cost of the MAKE READY, you will have the option to accept the costs and authorize PECO to proceed with the application OR reject the costs and cancel the application.

(6) Should you decide to amend your application for reasons not resulting from PECO's field survey, your application will be canceled and you must resubmit for joint use of PECO's facilities.

(7) If you accept the cost and authorize PECO to proceed with the application, we will release the Make Ready work to our construction work management upon receipt of the payment. Payment must be received within 60 days of the date of the invoice. After that time, the application will be canceled and if you want to continue with the application at a later date, a new application will be required.

(8) Upon receipt of the payment authorizing PECO to proceed, PECO will prepare and mail our standard "Pole Attachment Agreement", in duplicate. You must sign both copies in the proper location, and return both copies to this office.

(9) PECO will complete any required make ready work and return one fully executed copy of the "Pole Attachment Agreement" to you for your records. At this time, PECO will issue a permit, which will permit you to begin work. **The permit must be available on site for inspection during construction.**

(10) It is understood that the applicant CANNOT attach to any PECO poles or utilize any PECO duct until a permit is issued.

(11) Applicant will identify their cable on every pole with a PECO approved cable tag.

(12) This application will remain in effect for sixty (60) days.

Applicant hereby acknowledges to have read and understood this application, agrees to comply with the application procedures described above and to pay in full the Engineering and Survey fees and understands the initial application fee is non-refundable.

Date Signed *Applicant's Signature*

*Title:*_____ _____

EXHIBIT B PERMIT

Real Estate Division

PECO ENERGY

PECO Energy Company
2301 Market Street, N3-3
PO Box 8699
Philadelphia, PA 19101-8699
215 841 5385

PERMIT

FOR JOINT USE OF
PECO ENERGY FACILITIES

PERMIT NO. 2007170001

CONTROL NO.: 6762

In accordance with the "Application for Joint Use of PECO Energy Facilities" dated October 1, 2019 and submitted by **New Cingular Wireless PCS, LLC,** a permit to attach to facilities as outlined in the application for **Conshohocken Borough, Montgomery County**, is hereby granted for the following facilities:

1 PECO Pole

Pole Numbers:
159

SAFETY FIRST! **SAFETY FIRST!**

Please take time to carefully review PECO Energy safety requirements by visiting our website at
(http://wwww.exeloncorp.com/ourcompanies/peco/pecores/safety/)

111401v02

Follow instructions provided to obtain a UserID and Password

Workers may be electrocuted or seriously injured by contact with power lines. Consider ALL OVERHEAD OR UNDERGROUND POWER LINES to be ENERGIZED and NOT INSULATED. PECO will either de-energize and ground or relocate lines that may conflict with construction or other activity or install protective devices designed to guard against ACCIDENTAL contact with energized lines whichever is appropriate for the pending work or activity. In all cases, the Contractor is required to provide an awareness barrier, inform all workers of the location of PECO Energy facilities, instruct them that these facilities are not to be contacted at any time by personnel, tools, material, or equipment, and to keep clear whether energized or not, supervise the work while it is being performed to assure compliance with OSHA regulations and these instructions, and to proactively take action to PREVENT ANY CONTACT with PECO facilities by workers, equipment, tools, or carried items.

TO REQUEST PROTECTIVE COVER – COMPLETE THE ATTACED FORM

PECO ENERGY COMPANY

By: Diana Gaiser

Date: 7/17/2020

This permit is void if not exercised within ninety (90) days from the date granted.

THIS PERMIT MUST BE AVAILABLE ON SITE FOR INSPECTION DURING CONSTRUCTION

Mail Completed Form To:

PECO Real Estate Department2301 Market Street, N3-3
Philadelphia, PA. 19103
Or
Fax to: 215-841-4109

PECO
An Exelon Company

WORKING NEAR EXELON ENERGY DELIVERY ELECTRIC LINES OR EQUIPMENT

Location of Work:	Type of Work to be Done:
Contractor/Company:	**Contractor Representative:**
Name:	**Name:**
Address:	**Address:**
Phone:	**Phone:**

Probable Duration of Job

Start Date:	**End Date:**

Exelon Energy Delivery Work Required:
(De-energize and ground, relocate, or install protective devices)

Safety on the job site is the employer's/contractor's obligation under OSHA. You must notify Exelon before working within 11 feet of overhead lines. Please note that 69KV lines require 11 feet of clearance. Lines with voltages higher than 69KV are covered by procedure S7070. Lines below 50KV require 10 feet of clearance. OSHA General Industry Standards Section 1910.333, Selection and Use of Work Practices, Sub-section © (3), Overhead Lines, states "If work is to be performed near overhead lines, the lines shall be de-energized and grounded, or other protective measures shall be provided before work is started. If protective measures, such as guarding, isolating, or insulating are provided, these precautions shall prevent employees from contacting such lines directly with any part of their body or indirectly through conductive materials, tools, or equipment."

***WARNING*-Workers may be electrocuted or seriously injured by contact with power lines. Consider ALL OVERHEAD OR UNDERGROUND POWER LINES to be ENERGIZED and NOT INSULATED. Exelon will either de-energize and ground or relocate lines that may conflict with construction or other activity or install protective devices designed to guard against ACCIDENTAL contact with energized lines whichever is appropriate for the pending work or activity. In all cases, the Contractor is required to provide an awareness barrier, inform all workers of the location of Exelon Energy facilities, instruct them that these facilities are not to be contacted at any time by personnel, tools, material, or equipment, and to keep clear whether energized or not, supervise the work while it is being performed to assure compliance with OSHA regulations and these instructions, and to proactively take action to PREVENT ANY CONTACT with Exelon Energy Delivery facilities by workers, equipment, tools, or carried items.**

Notes/Special Conditions:

_____	____/____	_____	____/____
(Signature Contractor)	**(Date/Time)**	**(Signature of Exelon)**	**(Date/Time)**

Shaun Michael Paul

22 West Eppley Drive, Carlisle, PA, 17015
Phone Number: (717) 982-2918
Email Address: paul@rfservices.org

Personal Statement

18 Years of experience in the wireless industry. During my tenure I have served as a manager, contributor and contractor. My responsibilities have included; radio frequency design, network performance, capacity analysis, frequency planning, regulatory compliance (FAA, FCC) and network optimization for multiple technologies (iDEN, TDMA, CDMA, WiMAX, GSM, UMTS and LTE). I have been directly involved with multiple design aspects for over 10,000 sites National and Internationally. I have been acknowledged as an expert over 100 times by local municipalities for proposed new cellular tower facilities.

Key Skills

Radio Frequency Design • Acknowledged as a Radio Frequency Expert • Radio Frequency Optimization • Microwave Network Design • Frequency Planning • Network Capacity

Employment History

❖ *Rf Services, Inc*

Radio Frequency Design Consultant — *May 2012 to Current*

Support the design efforts for GSM, UMTS and LTE networks in New Jersey, Virginia, Pennsylvania, Delaware, and Maryland. Provide expert Radio Frequency testimony at municipal hearings for Verizon and AT&T. Lead engineer (contractor) in the ATT Philly market for a national optimization project. Completed over 1,000 RFS documents for ATT Philadelphia and Virginia markets. Designed multiple Small Cell networks across the country

❖ *Sensus/Xylem Inc*

Radio Frequency Design Engineer — *December 2012 to Current*

Design wireless networks for National and International utility provides which are used in conjunction with smart grid products. Designed over 200 smart grid networks with over 4,000 sites for Gas, Electric, Water and Lighting customers. Responsible for selecting the site locations and assisting with determining the spectrum needs for each design.

❖ *Clearwire/Ericsson*

Radio Frequency Design and Performance Manager — June 2007 to December 2012

Managed a team of 20 radio frequency engineers who were responsible for all design and performance related matters. Designed/Approved greater than 1,000 new sites for the Central PA, Baltimore and Washington DC markets. Provided expert Radio Frequency testimony at municipal hearings. Provided weekly reports to the Chief Technical Officer relating to Capacity and Site design for the geographic areas I was responsible for.

❖ *Nextel Partners/Sprint*

Radio Frequency Design Manager — December 2000 to June 2007

Managed a team of 4 radio frequency engineers who were responsible for all design related matters in the Central PA area. National Performance/Optimization projects Lead. Provided expert Radio Frequency testimony at municipal hearings in Central Pennsylvania.

Education History

York Technical Institute — June 1998 to September 2000
(Computer Programming/Computer Science)

References

Donald Strickland
Former direct manager at Nextel Partners/Sprint
Phone Number: (717) 554-3000

Mark Rubin
Chief Executive Officer of RF Services
Phone Number: (610) 915-8981

Michael S Grab
Attorney at Nikolaus & Hohenadel, LLP
Phone Number: (717) 684-4422

ULS License

PCS Broadband License - WPOI416 - NEW CINGULAR WIRELESS PCS, LLC

Call Sign	WPOI416	Radio Service	CW - PCS Broadband
Status	Active	Auth Type	Regular

Rural Service Provider Bidding Credit

Is the Applicant seeking a Rural Service Provider (RSP) bidding credit?

Reserved Spectrum

Reserved Spectrum

Market

Market	MTA009 - Philadelphia	Channel Block	A
Submarket	15	Associated Frequencies (MHz)	001850.00000000-001865.00000000 001930.00000000-001945.00000000

Dates

Grant	05/27/2015	Expiration	06/23/2025
Effective	08/31/2018	Cancellation	

Buildout Deadlines

1st	06/23/2000	2nd	06/23/2005

Notification Dates

1st	06/29/2000	2nd	05/26/2004

Licensee

FRN	0003291192	Type	Limited Liability Company

Licensee

NEW CINGULAR WIRELESS PCS, LLC
208 S Akard St., RM 1016
Dallas, TX 75202
ATTN Leslie Wilson

P:(855)699-7073
F:(214)746-6410
E:FCCMW@att.com

Contact

AT&T Mobility LLC
Cecil J Mathew
208 S Akard St., RM 1015
Dallas, TX 75202
ATTN FCC Group

P:(855)699-7073
F:(214)746-6410
E:FCCMW@att.com

Ownership and Qualifications

ULS License

PCS Broadband License - WPOI416 - NEW CINGULAR WIRELESS PCS, LLC

Map

Call Sign	WPOI416	Radio Service	CW - PCS
Market	MTA009 - Philadelphia	Channel Block	A
Submarket	15	Associated Frequencies (MHz)	001850.0 001930.0
Auction	04 - BB PCS A/B		

License Geography

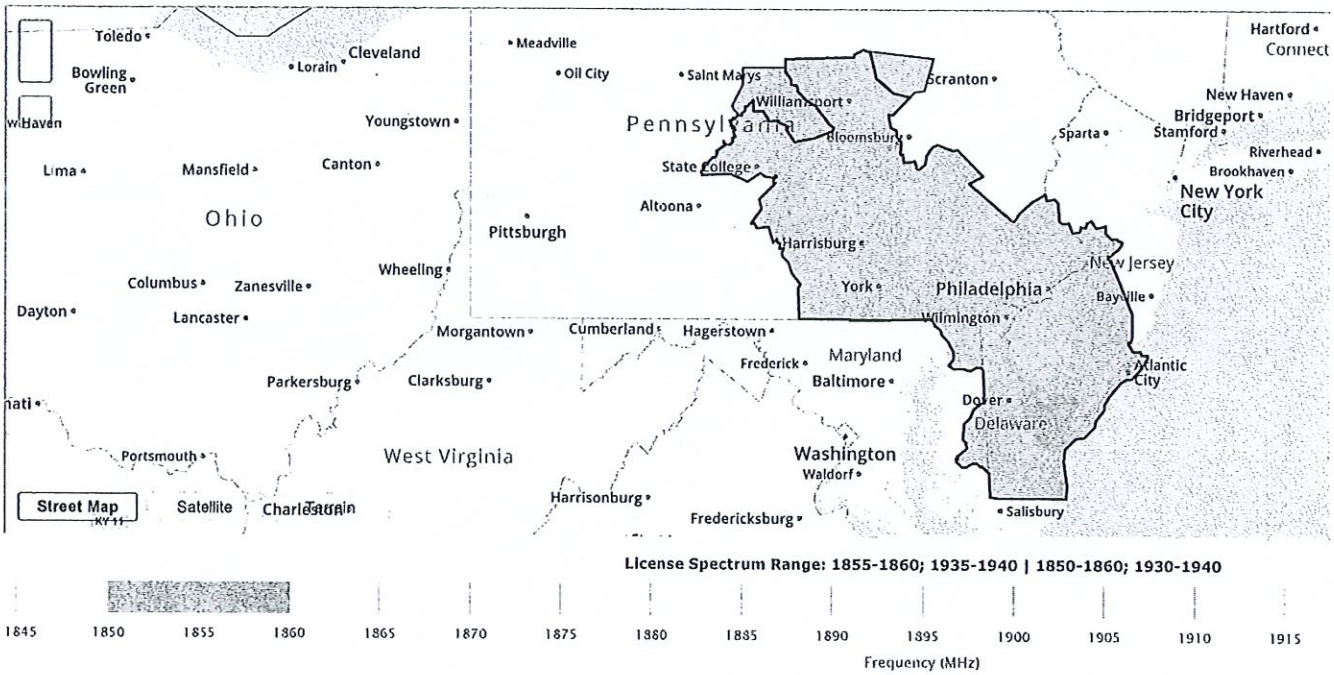

License Spectrum Range: 1855-1860; 1935-1940 | 1850-1860; 1930-1940

ULS License

PCS Broadband License - WPOI417 - New Cingular Wireless PCS, LLC

Call Sign	WPOI417	Radio Service	CW - PCS Broadband
Status	Active	Auth Type	Regular

Rural Service Provider Bidding Credit

Is the Applicant seeking a Rural Service Provider (RSP) bidding credit?

Reserved Spectrum

Reserved Spectrum

Market

Market	MTA009 - Philadelphia	Channel Block	A
Submarket	9	Associated Frequencies (MHz)	001850.00000000-001865.00000000 001930.00000000-001945.00000000

Dates

Grant	06/05/2015	Expiration	06/23/2025
Effective	08/31/2018	Cancellation	

Buildout Deadlines

1st	06/23/2000	2nd	06/23/2005

Notification Dates

1st	06/29/2000	2nd	05/26/2004

Licensee

FRN	0003291192	Type	Corporation

Licensee

New Cingular Wireless PCS, LLC
208 S Akard St., RM 1015
Dallas, TX 75202
ATTN Cecil J Mathew

P:(855)699-7073
F:(214)746-6410
E:FCCMW@att.com

Contact

AT&T Mobility LLC
Cecil J Mathew Esq
208 S Akard St., RM 1015
Dallas, TX 75202
ATTN FCC Group

P:(855)699-7073
F:(214)746-6410
E:FCCMW@att.com

Ownership and Qualifications

ULS License

PCS Broadband License - WPOI417 - New Cingular Wireless PCS, LLC

Map

Call Sign	WPOI417	Radio Service	CW - PCS
Market	MTA009 - Philadelphia	Channel Block	A
Submarket	9	Associated Frequencies (MHz)	001850.0 001930.0
Auction	04 - BB PCS A/B		

License Geography

License Spectrum Range: 1860-1865; 1940-1945

ULS License

700 MHz Lower Band (Blocks C, D) License - WPWU949 - New Cingular Wireless PCS, LLC

Call Sign	WPWU949	Radio Service	WZ - 700 MHz Lower Band (Blocks C, D)
Status	Active	Auth Type	Regular

Rural Service Provider Bidding Credit

Is the Applicant seeking a Rural Service Provider (RSP) bidding credit?

Reserved Spectrum

Reserved Spectrum

Market

Market	CMA004 - Philadelphia, PA	Channel Block	C
Submarket	0	Associated Frequencies (MHz)	000710.00000000-000716.00000000 000740.00000000-000746.00000000

Dates

Grant	07/23/2019	Expiration	06/13/2029
Effective	07/23/2019	Cancellation	

Buildout Deadlines

1st	06/13/2019	2nd	

Notification Dates

1st	04/05/2018	2nd	04/05/2018

Licensee

FRN	0003291192	Type	Limited Liability Company

Licensee

New Cingular Wireless PCS, LLC
208 S Akard St., RM 1015
Dallas, TX 75202
ATTN Cecil J Mathew

P:(855)699-7073
F:(214)746-6410
E:FCCMW@att.com

Contact

AT&T Mobility LLC
Cecil J Mathew
208 S Akard St., RM 1015
Dallas, TX 75202
ATTN Michael P. Goggin

P:(855)699-7073
F:(214)746-6410
E:FCCMW@att.com

Universal Licensing System

700 MHz Lower Band (Blocks C, D) License - WPWU949 - New Cingular Wireless PCS, LLC

Map

Call Sign	WPWU949	Radio Service	WZ - 700
Market	CMA004 - Philadelphia, PA	Channel Block	C
Submarket	0	Associated Frequencies (MHz)	000710.0(000740.0(
Auction	44 - 700Lwr-C,D		

License Geography

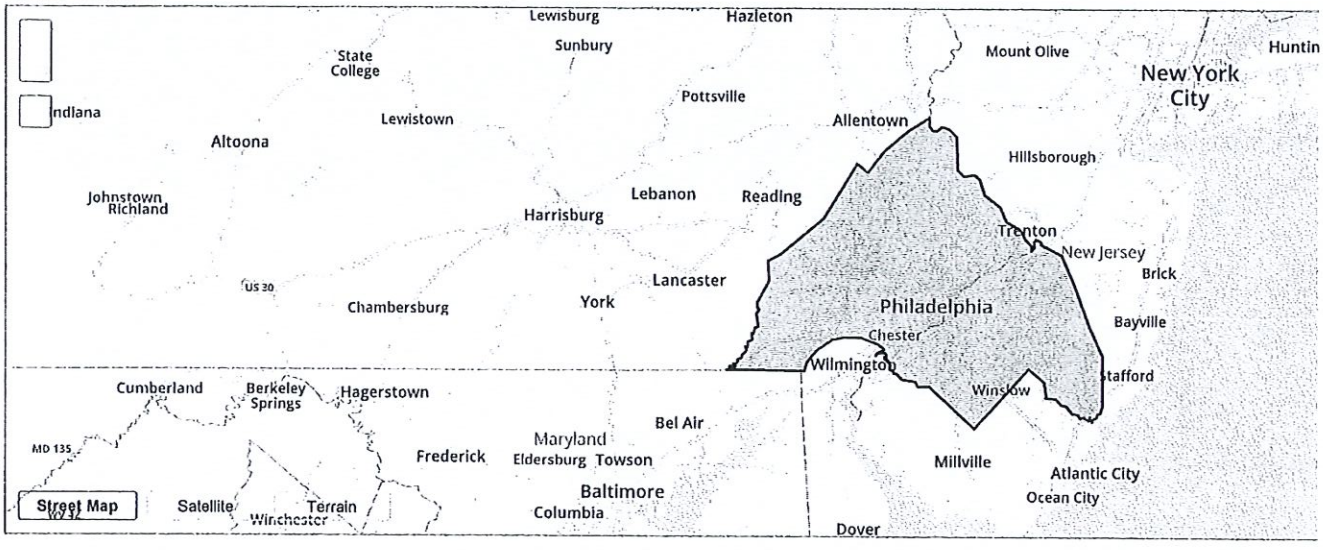

License Spectrum Range: 710-716; 740-746

Federal Communications Commission
445 12th Street SW
Washington, DC 20554

Phone: 1-877-480-3201
TTY: 1-717-338-2824
Submit Help Request

ULS License

AWS (1710-1755 MHz and 2110-2155 MHz) License - WQGD671 - New Cingular Wireless PCS, LLC

Call Sign	WQGD671	Radio Service	AW - AWS (1710-1755 MHz and 2110-2155 MHz)
Status	Active	Auth Type	Regular

Rural Service Provider Bidding Credit

Is the Applicant seeking a Rural Service Provider (RSP) bidding credit?

Reserved Spectrum

Reserved Spectrum

Market

Market	CMA004 - Philadelphia, PA	Channel Block	A
Submarket	0	Associated Frequencies (MHz)	001710.00000000-001720.00000000 002110.00000000-002120.00000000

Dates

Grant	12/18/2006	Expiration	12/18/2021
Effective	02/20/2019	Cancellation	

Buildout Deadlines

1st 2nd

Notification Dates

1st 2nd

Licensee

FRN	0003291192	Type	Limited Liability Company

Licensee

New Cingular Wireless PCS, LLC
208 S Akard St. RM 1015
Dallas, TX 75202
ATTN Cecil J Mathew

P:(855)699-7073
F:(214)746-6410
E:FCCMW@att.com

Contact

AT&T Mobility LLC
Cecil J Mathew
208 S Akard St., RM 1015
Dallas, TX 75202
ATTN Michael P. Goggin

P:(855)699-7073
F:(214)746-6410
E:FCCMW@att.com

ULS License

AWS (1710-1755 MHz and 2110-2155 MHz) License - WQGD671 - New Cingular Wireless PCS, LLC

Map

Call Sign	WQGD671	Radio Service	AW - AWS
Market	CMA004 - Philadelphia, PA	Channel Block	A
Submarket	0	Associated Frequencies (MHz)	001710.0 002110.0
Auction	66 - AWS-1		

License Geography

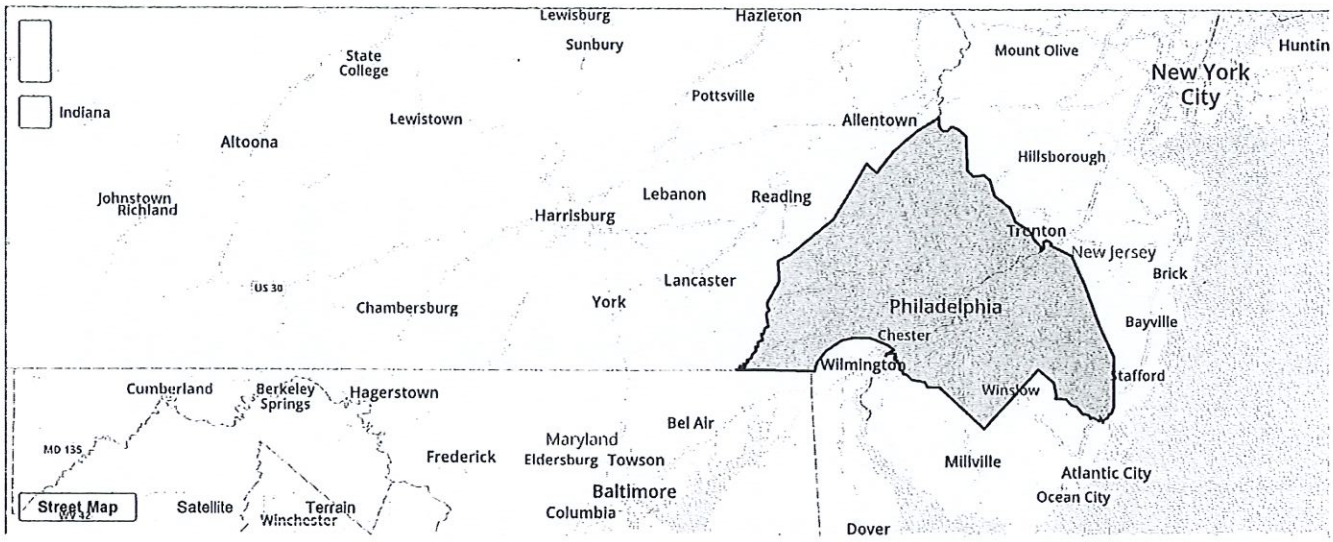

License Spectrum Range: 1710-1720; 2110-2120

ULS License

700 MHz Lower Band (Blocks A, B & E) License - WQIZ618 - New Cingular Wireless PCS, LLC

Call Sign	WQIZ618	Radio Service	WY - 700 MHz Lower Band (Blocks A, B & E)
Status	Active	Auth Type	Regular

Rural Service Provider Bidding Credit

Is the Applicant seeking a Rural Service Provider (RSP) bidding credit?

Reserved Spectrum

Reserved Spectrum

Market

Market	BEA012 - Philadelphia-Wilmington-Atlantic City, PA-NJ-DE-MD	Channel Block	E
Submarket	0	Associated Frequencies (MHz)	000722.00000000-000728.00000000

Dates

Grant	06/26/2008	Expiration	03/07/2021
Effective	08/31/2018	Cancellation	

Buildout Deadlines

1st	03/07/2017	2nd	03/07/2021

Notification Dates

1st	03/15/2017	2nd	

Licensee

FRN	0003291192	Type	Limited Liability Company

Licensee

New Cingular Wireless PCS, LLC
208 S Akard St., RM 1016
Dallas, TX 75202
ATTN Leslie Wilson

P:(855)699-7073
F:(214)746-6410
E:FCCMW@att.com

Contact

AT&T Mobility LLC
Cecil J Mathew
208 S Akard St., RM 1015
Dallas, TX 75202
ATTN Michael P. Goggin

P:(855)699-7073
F:(214)746-6410
E:FCCMW@att.com

ULS License

700 MHz Lower Band (Blocks A, B & E) License - WQIZ618 - New Cingular Wireless PCS, LLC

Map

Call Sign	WQIZ618	Radio Service	WY - 700
Market	BEA012 - Philadelphia-Wilmington-Atlantic City, PA-NJ-DE-MD	Channel Block	E
Submarket	0	Associated Frequencies (MHz)	000722.0
Auction	73 - 700 MHz		

License Geography

License Spectrum Range: 722-728

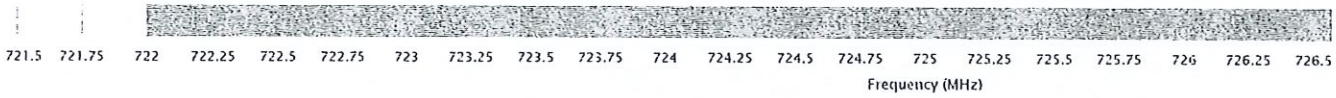

RF Services, Inc.

230 Overlook Road | Morgantown, PA 19543

February 25, 2021

Radio Frequency Design Report

AT&T's Proposed Location
"CON01_003"

139 W. 3RD AVENUE
CONSHOHOCKEN, PA19428
MONTGOMERY COUNTY

INTRODUCTION:

The Application for Municipal Approval, submitted by New Cingular Wireless PCS, LLC (AT&T), is to install a Wireless Telecommunications Facility consisting of one antenna. This antenna will be mounted at 43' 3" (antenna centerline) on top of a utility pole, along with associated equipment on the property located at 139 W. 3RD AVENUE, CONSHOHOCKEN, PA 19428.

I, Shaun Paul, am a Wireless Consultant, contracted by AT&T and its partners, to design and evaluate communications systems. I have over 20 years of experience in the wireless industry. My responsibilities include identifying network deficiencies, respective to service coverage and capacity in wireless communications systems, and assessing the ability of proposed antenna sites to adequately remedy those deficiencies. Further details regarding my professional profile are contained in *Appendix C* of this report.

AT&T is licensed by the Federal Communications Commission (FCC) to serve the public within Montgomery County and throughout Pennsylvania. To accomplish this, the FCC has authorized AT&T to construct and operate a network of wireless communication facilities in Pennsylvania and across the United States. Pursuant to FCC regulations and its FCC license, AT&T seeks to construct its network of wireless communications facilities in order to provide the public with substantially seamless coverage and to provide reliable wireless services within its licensed area. AT&T's FCC licenses for Montgomery County Pennsylvania are attached as *Appendix A* of this document.

AT&T seeks to design its wireless network to provide reliable wireless services to its customers, whether those customers are on the street, in a vehicle, or in a building. Providing reliable service to its customers in each context is critical for AT&T to provide the quality of wireless services that is necessary for both voice and data services. According to the CDC[1], greater than one–half of American homes (53.9%) exclusively have cellular phones. Additionally, Cisco[2] represents that mobile data traffic has grown 17-fold over the past 5 years, and is projecting that the average smart phone will generate 11 GB of traffic per month by 2022, an increase of over four times the 2017 average of 2 GB per month

In an effort to operate its network and meet service requirements for its customers, AT&T must have a system of relatively low power cell sites to serve portable wireless communication handsets and mobile devices. A typical facility, such as the one proposed, consists of antennas mounted to a structure which are connected to radio operating equipment housed at or near the structure. A number of factors determine the distance between the cell sites including (but not limited to): topography, physical obstructions, foliage, antenna height, power levels, and operating frequency.

[1] https://www.cdc.gov/nchs/data/nhis/earlyrelease/wireless201806.pdf

[2] https://www.cisco.com/c/en/us/solutions/collateral/service-provider/visual-networking-index-vni/white-paper-c11-738429.html#_Toc953325

PROJECT DESCRIPTION:

AT&T is seeking to construct a new facility to address the existing network demand by providing improved in building coverage and capacity relief to the surrounding sites. AT&T's existing wireless network in the area surrounding the proposed location is not adequate to properly serve its customers who live and/or operate businesses in portions of the borough. The existing facilities currently serving this area are approaching a point of capacity exhaust due to the continued growing customer demand and increased usage on the AT&T network.

The proposed facility is commonly referred to in the wireless industry as a microcell or "Small Cell" telecommunication facility. Small cell facilities are typically constructed in densely populated or heavily trafficked areas in order to provide precise coverage and capacity relief to the surrounding "Macro" telecommunications facilities. This proposed facility will not only provide capacity relief for the surrounding sites, but will also provide improved in building coverage for the AT&T customers in the targeted area. Small Cell facilities operate at a reduced transmit power level typically through a single low-profile antenna. As a result, these facilities provide a much smaller coverage area when compared to Macro facilities making the precise placement even more critical.

The location of the proposed facility is based heavily on its proximity to the AT&T's subscribers. To effectively provide adequate service, a telecommunications facility must be located as close to the subscriber density as possible. The use of a small cell facility provides an aesthetically pleasing solution that allows AT&T to better manage and evenly distribute capacity across multiple small cell facilities.

TECHNICAL PARAMETERS:

AT&T plans to install (1) Galtronics GQ2412-06613 "can-tenna" style antenna with a centerline height of 44' 3". AT&T plans to install (2) Remote Radio Heads (RRHs) within an equipment shroud at a centerline of 14' 8". The RRHs provide radio connectivity to the antennas, while also converting radio-frequency signals to light, as the RRHs are fiber optically fed

AT&T utilizes both fourth-generation (4G) and fifth-generation (5G) Long Term Evolution (LTE) technology to service its customers in this area. The LTE (4G) specification provides downlink peak rates of 300 Mbit/s, uplink peak rates of 75 Mbit/s, and QoS provisions permitting a transfer latency of less than 5 ms in the radio access network. LTE has the ability to manage fast-moving mobiles and concurrently supports multi-cast and broadcast streams. LTE supports scalable carrier bandwidths, from 1.4 MHz to 20 MHz and supports both frequency division duplexing (FDD) and time-division duplexing (TDD).

Using Quality of Service Class Identifiers (QCI), the LTE network allows prioritization of real-time services (voice conversation) over non-real-time (web surfing or TCP traffic). There are nine different QCIs, each with their own respective priority, allowable latency, and packet error loss constraints. The proposed configuration allows for excellent class or quality of service, even during periods of heavy congestion.

Respective to modulation, LTE utilizes OFDM, Orthogonal Frequency Division Multiplex, as the signal bearer and the associated access schemes, OFDMA (Orthogonal Frequency Division Multiplex) and SC-FDMA (Single Frequency Division Multiple Access).

AT&T utilizes 700, 850, 1900, 2100 and 2300 MHz for its LTE network in this area. The propagation characteristics for each frequency range are different, and those differences must be accounted for when selecting the optimal location for a new facility. Lower frequencies are capable of covering a much larger geographic area than that of higher frequencies. All 4G LTE services provide access to voice calls with a technology called Voice over LTE (VoLTE).

PROPAGATION MAPS:

In order to evaluate a service gap or deficiency in an area, AT&T performs signal propagation studies using Forsk Atoll software. The software is a predictive modeling tool that projects areas where sufficient coverage exists by taking into consideration topography, vegetation, and other morphology, which may attenuate the radio signal. AT&T has invested countless resources in ensuring the accuracy of the models used in this software tool.

EXISTING AT&T SERVICE:

The propagation map shown below in Figure 1 represents the best-server coverage footprints from the existing AT&T facilities. AT&T is currently transmitting from (3) existing facilities located within the Borough. However, the site which serves this area is located outside the borough and is labeled on the map as West Conshocken. This existing facility is located on the Marriott West Hotel approximately 0.6 miles South West from the proposed facility. The dark blue areas on the map below represent the areas covered by the West Conshocken facility, specifically the north facing sector. AT&T mobile devices used in the dark blue areas in the map below would be served by this existing capacity limited facility.

The proposed facility shown in the map below as RPHL_CON01_003 was designed with the objective of providing capacity relief, with improved signal strength and signal quality for the residential and business areas along and around Maple Street between 1st Ave and 6th Ave.

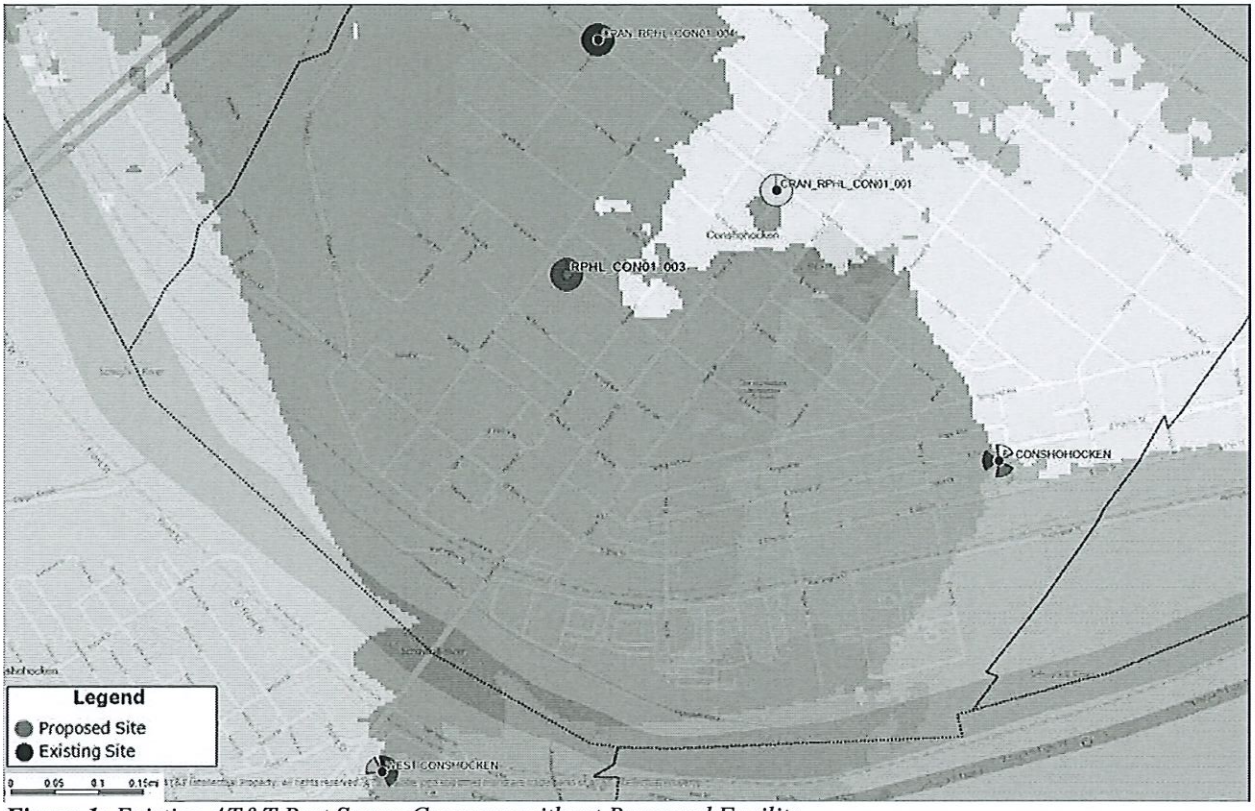

Figure 1: *Existing AT&T Best Server Coverage without Proposed Facility*

PROPOSED AT&T COVERAGE UPGRADE:

The existing AT&T customer demand and usage has resulted in portions of the Conshohocken borough being under-served. The proposed facility will provide a single dominant server in the targeted area and will provide adequate signal strength to penetrate the building materials common to high subscribe density areas. AT&T mobile devices in the newly shaded green coverage areas (Figure 2 below) will be served by the proposed facility thereby reducing the traffic load on the West Conshocken site.

It's important to note that the coverage area of the proposed site is much smaller when compared to that of the existing West Conshocken coverage (dark blue). Any decrease in antenna height at the proposed facility would reduce the offload area and diminish the effectiveness of the proposed site.

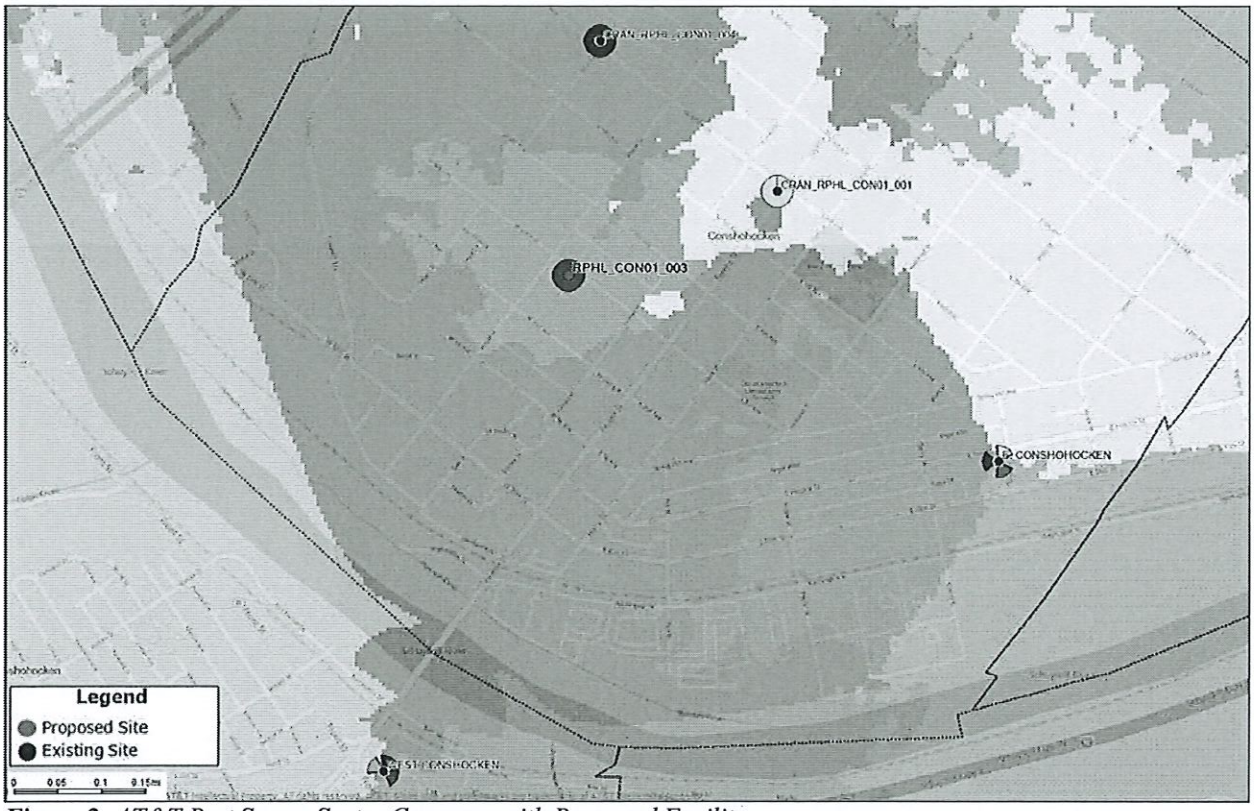

Figure 2: *AT&T Best Server Sector Coverage with Proposed Facility*

SHARED USE OF EXISTING STRUCTURES:

AT&T and other wireless carriers always look to share or collocate on existing structures wherever possible. This practice is beneficial to municipalities as it limits the proliferation of tall structures or towers. Collocating also benefits the carriers by reducing the amount of time and costs associated with constructing a new wireless facility.

In the case of this application the proposed facility will be collocated on a utility pole.

COMPLIANCE WITH FEDERAL EMISSION STANDARDS:

The FCC requires all wireless antenna operators to perform an assessment of potential human exposure to radiofrequency (RF) fields emanating from all the transmitting antennas at a site whenever antenna operations are added or modified, and to ensure compliance with the Maximum Permissible Exposure (MPE) limit in the FCC regulations.

AT&T has provided a separate independent expert assessment of the RF levels and related FCC compliance for the wireless antenna operation on the proposed facility. The report, entitled Electromagnetic Exposure Analysis: "CON01_003" (dated 2/25/2021), was submitted with the application to the municipality.

The aforementioned analysis indicates that the maximum level of RF energy to which the public may be exposed due to the proposed wireless communication facility will be below all applicable health and safety limits. Specifically; **"Using upper limit assumptions for the AT&T equipment configuration, the cumulative radio-frequency exposure levels would be less than 3.5% of the applicable FCC standard at all locations of ground level public access. When calculated at antenna centerline height, the cumulative radio-frequency exposure levels would be less than 41% of the applicable FCC standard at all locations of public access including adjacent structures and their rooftops."**

SUMMARY OF FINDINGS:

In my professional opinion, the proposed facility is extremely well suited to provide enhanced services to the AT&T subscribers located in the central borough of Conshohocken. This portion of the borough is currently under-served resulting from inadequate capacity and coverage from the surrounding facilities. The design, facility location and proposed antenna height will provide adequate reliable services to the AT&T subscribers in the targeted geographic area.

As previously stated, the volume of mobile data usage has grown at an extreme rate over the last several years. The demand for faster speeds, the ability to use the mobile device in places previously not targeted, and the customers expectation of having unrestricted access to the network, has truly redefined the objectives for a proper network design.

Without the proposed facility, AT&T customers may experience an inability to place, receive and maintain phone calls (including calls to 911), reduced data speeds, or failure to gain access to the data network.

Based on my professional opinion, the analysis supplied in this Comprehensive RF Report demonstrates the need for building the proposed facility. The addition of this facility will allow AT&T to provide reliable wireless service to the target area and achieve its objectives. The proposed facility represents an exceptionally suitable location for AT&T which has been confirmed by use of reliable computer modeling.

Respectfully Submitted,

Shaun M Paul
RF Services, Inc.
230 Overlook Drive
Morgantown, PA 19543

On Behalf of:
New Cingular Wireless PCS, LLC
d/b/a AT&T Mobility

APPENDIX A: List of FCC Licenses AT&T Holds in Montgomery County, Pennsylvania

LICENSEE NAME	CALL SIGN	FRN	FCC MKT NO.	BLOCK	COUNTY	STATE	MHZ	FREQUENCIES	Band
New Cingular Wireless PCS, LLC	WQJU425	0003291192	CMA004	B	Montgomery	PA	12	704-710, 734-740	700 MHz
New Cingular Wireless PCS, LLC	WPWU949	0003291192	CMA004	C	Montgomery	PA	12	710-716, 740-746	700 MHz
New Cingular Wireless PCS, LLC	WPZA236	0003291192	EAG702	D	Montgomery	PA	6	716-722	700 MHz
New Cingular Wireless PCS, LLC	WQIZ618	0003291192	BEA012	E	Montgomery	PA	6	722-728	700 MHz
AT&T Spectrum Holdings LLC	WQZM733	0025241142	PEA006	E	Montgomery	PA	10	637-642, 683-688	700 MHz
New Cingular Wireless PCS, LLC	KNKA382	0003291192	CMA004	A	Montgomery	PA	25	824-835, 869-880, 845-846.5, 890-891.5	850 MHz
New Cingular Wireless PCS, LLC	WPOI417	0003291192	MTA009	A9	Montgomery	PA	10	1860-1865, 1940-1945	1900 MHz
New Cingular Wireless PCS, LLC	WPOI416	0003291192	MTA009	A15	Montgomery	PA	20	1850-1860, 1930-1940	1900 MHz
New Cingular Wireless PCS, LLC	KNLG690	0003291192	BTA346	D	Montgomery	PA	10	1865-1870, 1945-1950	1900 MHz
New Cingular Wireless PCS, LLC	WQGD671	0003291192	CMA004	A	Montgomery	PA	20	1710-1720, 2110-2120	2100 MHz
AT&T Wireless Services 3 LLC	WQVN688	0023910920	BEA012	H	Montgomery	PA	10	1760-1765, 2160-2165	2100 MHz
AT&T Wireless Services 3 LLC	WQVN689	0023910920	BEA012	I	Montgomery	PA	10	1765-1770, 2165-2170	2100 MHz
New Cingular Wireless PCS, LLC	KNLB314	0003291192	MEA004	A	Montgomery	PA	10	2305-2310, 2350-2355	2300 MHz
New Cingular Wireless PCS, LLC	KNLB275	0003291192	MEA004	B	Montgomery	PA	10	2310-2315, 2355-2360	2300 MHz
New Cingular Wireless PCS, LLC	WPQL631	0003291192	REA001	C4	Montgomery	PA	5	2315-2320	2300 MHz
New Cingular Wireless PCS, LLC	KNLB297	0003291192	REA001	D	Montgomery	PA	5	2345-2350	2300 MHz

APPENDIX B: Existing AT&T facilities surrounding the Proposed Location

AT&T Site Name	Latitude	Longitude	Structure Type	Address	City	Distance from Proposed Site Location (miles)	Antenna Centerline (feet)
CRAN_RPHL_CON01_001	40.0780	-75.3023	Utility Pole	528 FAYETTE Street @ (POLE)	CONSHOHOCKEN	0.2	34
CRAN_RPHL_CON01_004	40.0804	-75.3061	Utility Pole	271 MAPLE Street @ (POLE)	CONSHOHOCKEN	0.3	34
E. CONSHOHOCKEN	40.0736	-75.2977	ROOFTOP	441 EAST HECTOR STREET	CONSHOHOCKEN	0.5	70
WEST CONSHOCKEN	40.0686	-75.3106	BUILDING-SIDE MOUNT	PHILADELPHIA MARRIOTT WEST 111 CRAWFORD AVENUE	WEST CONSHOHOCKEN	0.6	161
UNION HILL	40.0684	-75.3255	MONOPOLE	15 UNION HILL ROAD WEST C	WEST CONSHOHOCKEN	1.1	92
CONSHOHOCKEN CURVE	40.0798	-75.2848	UTILITY	1200 DURANT STREET	WEST CONSHOHOCKEN	1.2	132
RIDGE & BUTLER PK	40.0921	-75.2942	UTILITY	100 SHERWOOD LANE	CONSHOHOCKEN	1.3	75
PLYMOUTH MEETING	40.0977	-75.3150	SELF SUPPORT	1155 CONSHOHOCKEN ROAD	PLYMOUTH MEETING	1.5	148
WEST SPRING MILLS	40.0675	-75.2786	SELF SUPPORT	1700 WAVERLY ROAD	GLADWYNE	1.6	111
SWEDELAND	40.0852	-75.3357	UTILITY	2200 RENAISSANCE	KING OF PRUSSIA	1.6	143
GULPH STATION	40.0670	-75.3414	MONOPOLE	1050 TRINITY LANE	KING OF PRUSSIA	2.0	100

APPENDIX C: Summary Resume of Shaun Paul

PROFESSIONAL EXPERIENCE

RF Consultant –RF Services Inc.

- Extensive wireless carrier experience with over 20 years working with Nextel Partners, Sprint, AT&T Wireless, Verizon Wireless, T-Mobile and Clearwire.
- Have been qualified and testified as an Expert in Radio Frequency Design for over 300 municipal hearings throughout the tri-state area.
- Expert in site design performing more than 1,000 candidate/cluster evaluations, aimed toward achieving design goals for iDEN/LTE/UMTS/CDMA/EVDO/WiMAX networks
- RF Manager with a team of 20 RF engineers responsible for the Central PA, Baltimore and Washington DC networks.
- Project Lead for several large-scale next generation deployments
- Completed search rings, site visits, and Final RF Designs for over 2,000 sites
- Completed over 50 Greenfield market designs for markets across the United States
- Performed upwards of 100 FCC Compliance Surveys in wireless markets throughout the United States

AT&T "CON01_003"

RF MODELLING WITH AND WITHOUT PROPOSED SITE

FEBUARY 23rd 2021

Rethink Possible®

© 2013 AT&T Intellectual Property. All rights reserved. AT&T, Globe logo and other marks are trademarks of AT&T Intellectual Property.

BEST SERVERING SECTOR **WITHOUT** PROPOSED FACILITY

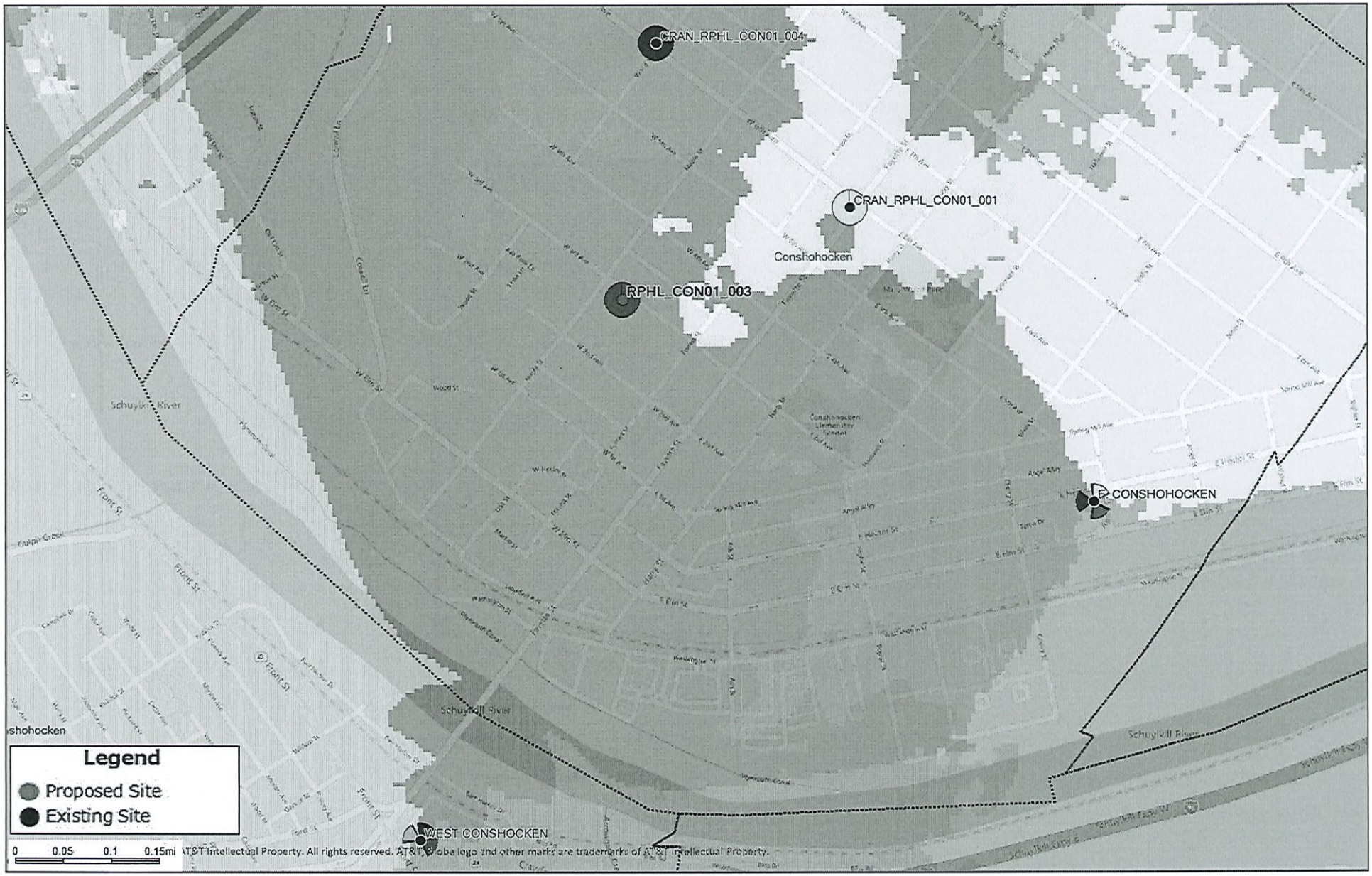

BEST SERVERING SECTOR **WITH** PROPOSED FACILITY

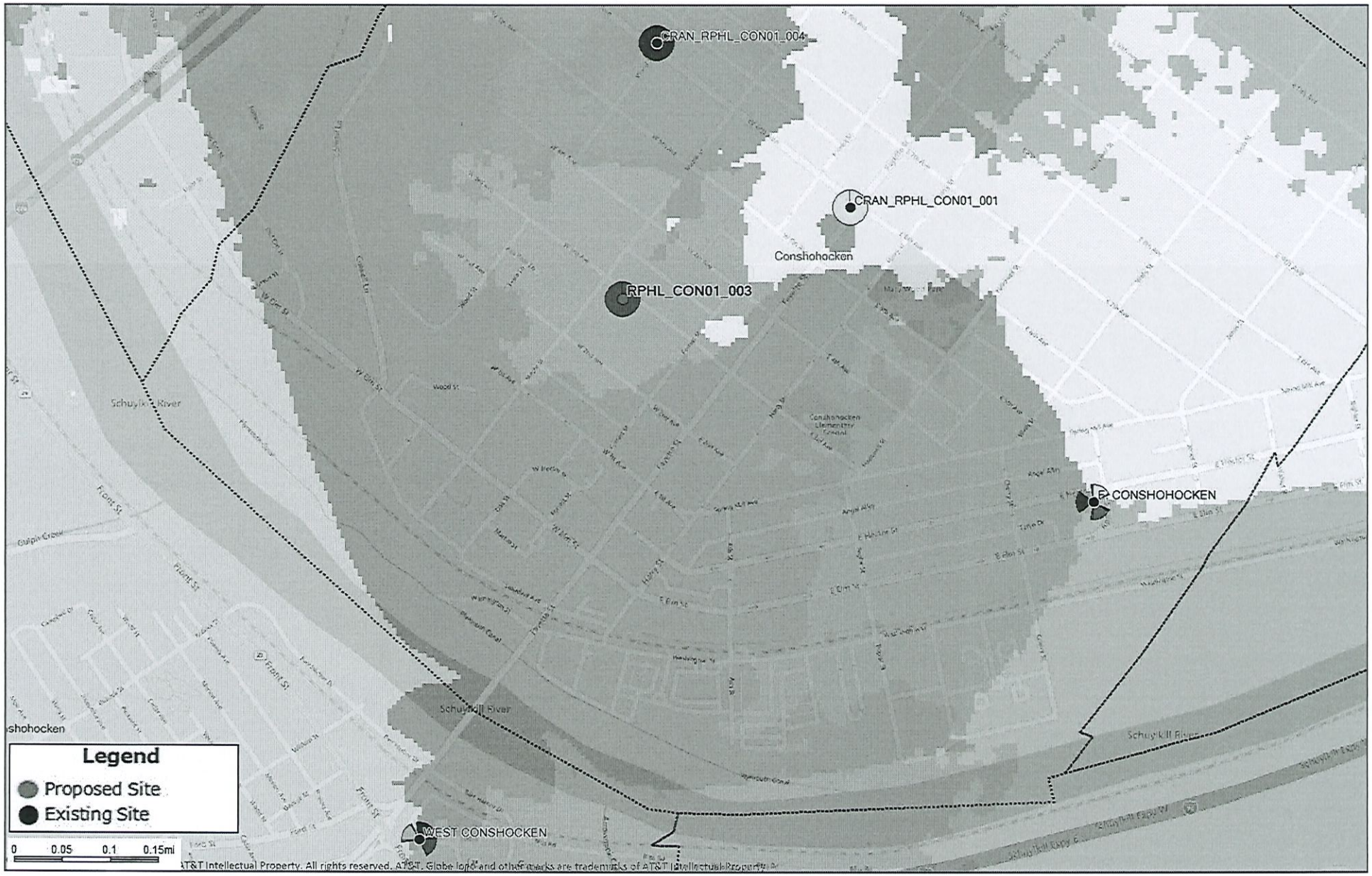

GROUND ELEVATION AROUND PROPOSED FACILITY

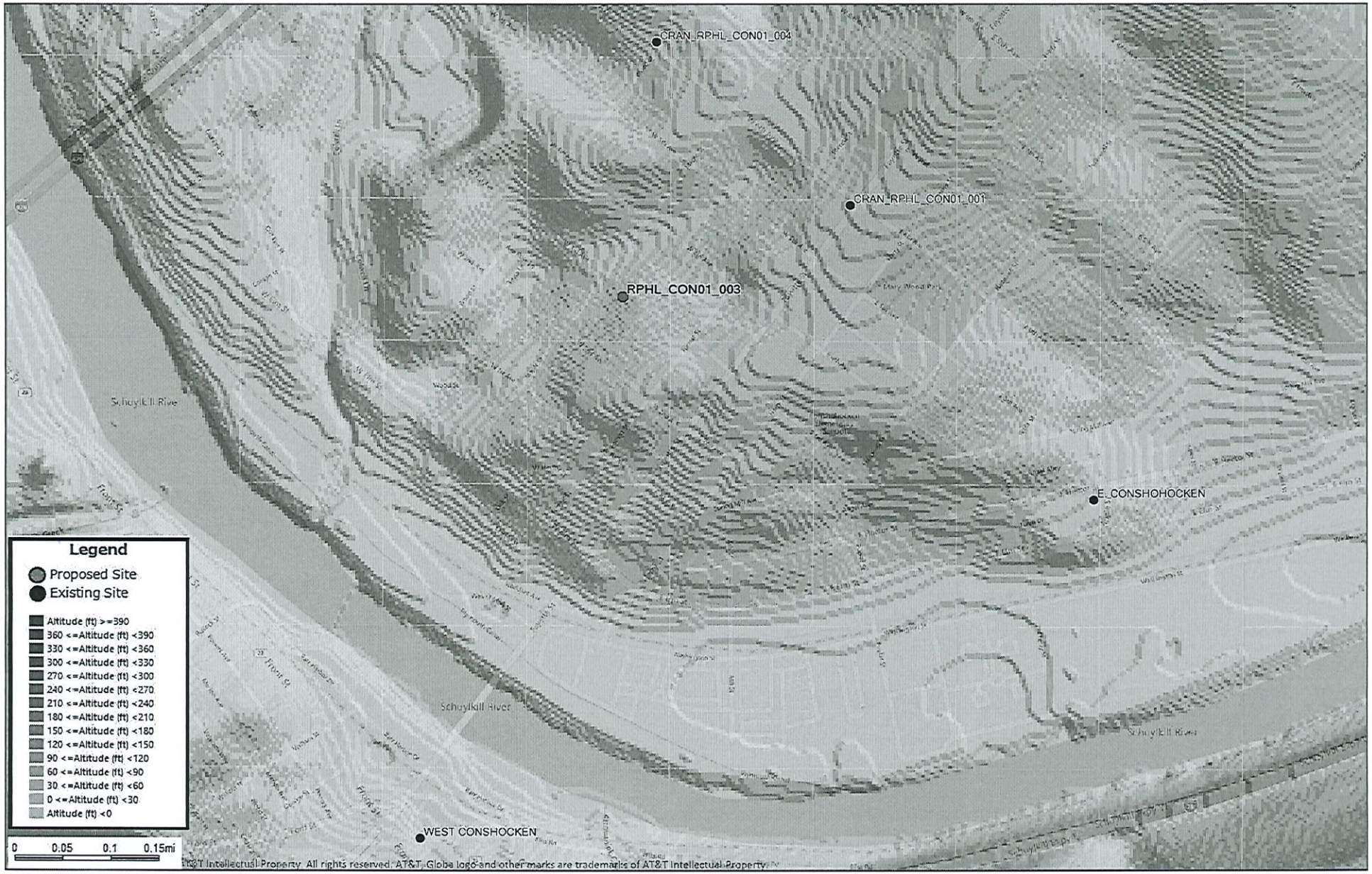

1900 MHz RELIABLE COVERAGE **WITHOUT** PROPOSED FACILITY

1900 MHz RELIABLE COVERAGE **WITH** PROPOSED FACILITY

PO Box 165
Fairview Village, PA 19409
Phone: 610.304.2024
Fax: 610.584.5387
info@dBmEng.com

dBm ENGINEERING, P.C.

February 25, 2021
Samantha Berman
Jacobs
200 N. Warner Road
King of Prussia, PA 194

Subject: **FCC Compliance Analysis**
"CON01_003"
Latitude: 40.076614° N
Longitude: 75.306695° W
139 West 3rd Ave
Conshohocken, PA

Ms. Berman:

I have received and executed your request that I perform an independent evaluation of the anticipated radio-frequency emission levels for the AT&T telecommunications facility proposed at the above referenced coordinates. The intention of this study is to verify compliance with Federal Communications Commission (hereafter "FCC") guidelines for human exposure limits to radio-frequency electromagnetic fields as per FCC Code of Federal Regulation 47 CFR 1.1307 and 1.1310 which incorporate ANSI standards C95.3. As a registered Professional Engineer, I am bound by a code of ethics to hold paramount the safety, health, and welfare of the public. All statements and calculations offered herein are made in an objective and truthful manner pursuant to that code.

Summary of Findings

The maximum exposure to radio-frequency emissions from the proposed AT&T equipment will be far below FCC exposure limits. **Using upper limit assumptions for the AT&T equipment configuration, the cumulative radio-frequency exposure levels would be less than 3.5% of the applicable FCC standard at all locations of ground level public access. When calculated at antenna centerline height, the cumulative radio-frequency exposure levels would be less than 41% of the applicable FCC standard at all locations of public access including adjacent structures and their rooftops.** The following charts specifically illustrate the anticipated exposure levels in areas surrounding the facility. All exposure limits have been calculated using the methods prescribed in FCC Office of Engineering and Technology (OET) Bulletin 65 "Evaluating Compliance with FCC Guidelines for Human Exposure to Radio-frequency Electromagnetic Fields". These upper-limit conditions include maximum traffic loading, maximum radio output, and constructive interference from ground reflection. AT&T will remain within their FCC governed limits for output power but for worst-case analysis purposes, the equipment theoretical output power is considered in this analysis. Additionally, signal attenuation due to environmental clutter such as buildings, trees, and roadways has been ignored which will overestimate actual power densities. Continuous exposure up to 100% of FCC limit is

considered by the scientific community to be just as safe as continuous exposure at 1% of FCC limit. **My findings indicate that AT&T will be operating in full compliance with all applicable standards as outlined in their Federal Communications Commission licensure.**

Applicability of the National Telecommunications Act of 1996

This Act states that "no state or local government or instrumentality thereof may regulate the placement, construction, and modification of personal wireless service facilities on the basis of the environmental effects of radio-frequency emissions to the extent that such facilities comply with the (Federal Communications) Commission's regulations concerning such emissions". As indicated above, this proposed facility will be in full compliance with the FCC's emissions standards and as such is beyond regulation in that regard.

Technical Parameters of Consideration

The above calculations were based on the equipment configuration information furnished by representatives of AT&T. Specifically, for this installation, AT&T plans to install a total of one (1) GALTRONICS GQ2412-06613 "can-tenna" style antenna (or similar) pole-top mounted on a replacement light pole with an antenna tip height of 45' 6". Transmitting through this antenna will be up to four (4) LTE channels in the 1900 MHz band at a cumulative maximum of 160 watts, up to four (4) LTE channels in the 2100 MHz band at a cumulative maximum of 160 watts, and up to eight (8) LTE channels in the 700 MHz band at a cumulative maximum of 320 watts.

Co-location of Other Wireless Providers

In an attempt to halt the proliferation of telecommunications structures and preserve as much of their natural landscape as possible many municipalities have adopted telecommunications ordinances that specifically require structures to accommodate additional wireless providers from a structural standpoint. **From the standpoint of radio-frequency exposure**, the AT&T equipment would in no way preclude the use of this facility by other providers.

Background Information

In 1985, the FCC first adopted guidelines to be used for evaluating human exposure to RF emissions. The FCC revised and updated these guidelines on August 1, 1996, as a result of a rule-making proceeding initiated in 1993. The new guidelines incorporate limits for Maximum Permissible Exposure (MPE) in terms of electric and magnetic field strength and power density for transmitters operating at frequencies between 300 kHz and 100 GHz.

The FCC's MPE limits are based on exposure limits recommended by the National Council on Radiation Protection and Measurements (NCRP) and, over a wide range of frequencies,

the exposure limits were developed by the Institute of Electrical and Electronics Engineers, Inc., (IEEE) and adopted by the American National Standards Institute (ANSI) to replace the 1982 ANSI guidelines. Limits for localized absorption are based on recommendations of both ANSI/IEEE and NCRP.

The FCC's limits, and the NCRP and ANSI/IEEE limits on which they are based, are derived from exposure criteria quantified in terms of specific absorption rate (SAR). The basis for these limits is a whole-body averaged SAR threshold level of 4 watts per kilogram (4 W/kg), as averaged over the entire mass of the body, above which expert organizations have determined that potentially hazardous exposures may occur. The MPE limits are derived by incorporating safety factors that lead, in some cases, to limits that are more conservative than the limits originally adopted by the FCC in 1985. Where more conservative limits exist, they do not arise from a fundamental change in the RF safety criteria for whole-body averaged SAR, but from a precautionary desire to protect subgroups of the general population who, potentially, may be more at risk.

The FCC exposure limits are also based on data showing that the human body absorbs RF energy at some frequencies more efficiently than at others. The most restrictive limits occur in the frequency range of 30-300 MHz where whole-body absorption of RF energy by human beings is most efficient. At other frequencies, whole-body absorption is less efficient, and consequently, the MPE limits are less restrictive.

MPE limits are defined in terms of power density (units of milliwatts per centimeter squared: mW/cm^2), electric field strength (units of volts per meter: V/m) and magnetic field strength (units of amperes per meter: A/m). The far-field of a transmitting antenna is where the electric field vector (E), the magnetic field vector (H), and the direction of propagation can be considered to be all mutually orthogonal ("plane-wave" conditions).

Occupational / controlled exposure limits apply to situations in which persons are exposed as a consequence of their employment and in which those persons who are exposed have been made fully aware of the potential for exposure and can exercise control over their exposure. Occupational/controlled exposure limits also apply where exposure is of a transient nature as a result of incidental passage through a location where exposure levels may be above general population/uncontrolled limits, as long as the exposed person has been made fully aware of the potential for exposure and can exercise control over his or her exposure by leaving the area or by some other appropriate means.
General population / uncontrolled exposure limits apply to situations in which the general public may be exposed or in which persons who are exposed as a consequence of their employment may not be made fully aware of the potential for exposure or cannot exercise control over their exposure. Therefore, members of the general public would always be considered under this category when exposure is not employment-related, for example, in the case of a telecommunications tower that exposes persons in a nearby residential area.

In the case of this study, the general population exposure limits have been applied as they are the more conservative set of standards.

Additional Remarks

The radio-frequency emission levels from AT&T and other PCS and Cellular communications base stations are similar to that of other two-way communications systems like those used by police, fire and ambulance personnel. In contrast, commercial broadcast systems like television and radio often transmit at power levels ten times greater or more than the systems discussed above.

The biological effects on humans of non-ionizing radio-frequency exposure have been studied extensively now for decades. There have been thousands of reports produced by government agencies, universities, and private research groups that support the standards adopted by the FCC. **To date, there have been no credible studies conducted whose results showed evidence of any adverse health effects at the above exposure limits.**

Sincerely,

Andrew M. Petersohn, P.E.
Registered Professional Engineer
Pennsylvania license number 073239

PO Box 165
Fairview Village, PA 19409
Phone: 610.304.2024
Fax: 610.584.5387
info@dBmEng.com

dBm ENGINEERING, P.C.

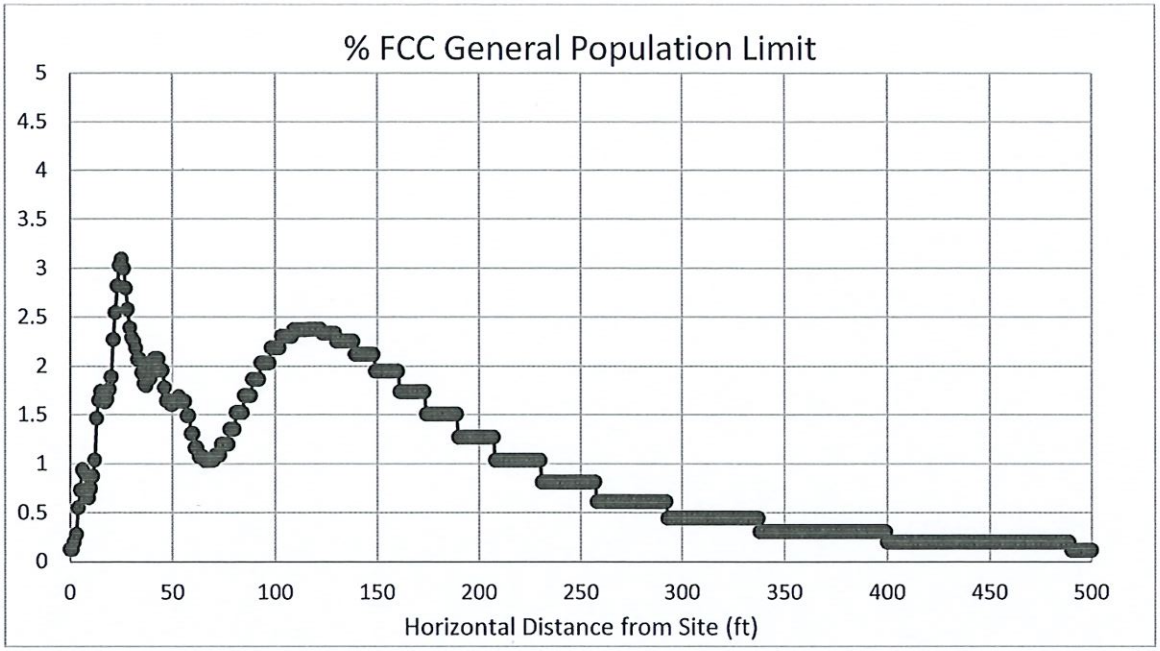

Figure-1 – calculated cumulative exposure level surrounding the proposed telecommunications facility expressed in percentage of the applicable FCC standard – **ground level**

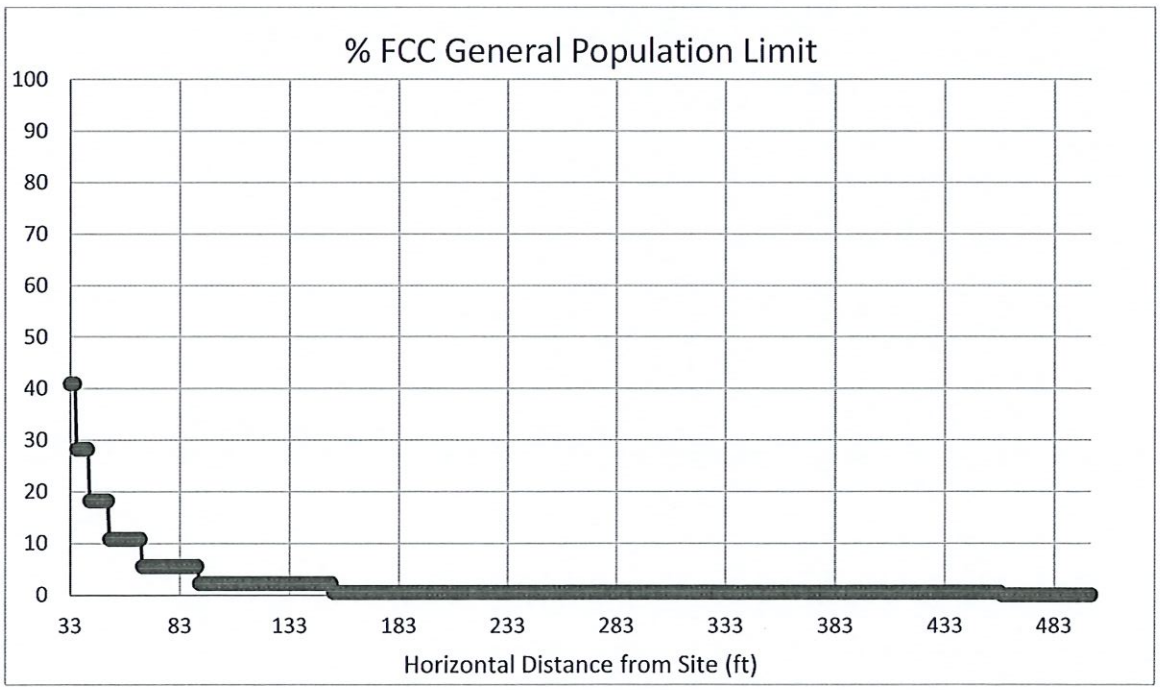

Figure-2 – calculated cumulative exposure level surrounding the proposed telecommunications facility expressed in percentage of the applicable FCC standard – **antenna centerline level**

PO Box 165
Fairview Village, PA 19409
Phone: 610.304.2024
Fax: 610.584.5387
info@dBmEng.com

dBm ENGINEERING, P.C.

DECLARATION OF ENGINEER

Andrew M. Petersohn, P.E., hereby states that he is a graduate telecommunications consulting engineer possessing Master and Bachelor Degrees in Electrical Engineering from Lehigh University (2005 and 1999, respectively). His corporation, dBm Engineering, P.C., has been retained by representatives of AT&T to perform an electromagnetic exposure analysis for a proposed telecommunications facility.

Mr. Petersohn asserts that the calculations and/or measurements described in this report were made personally and in a truthful and objective manner. Mr. Petersohn is a Registered Professional Engineer licensed in Pennsylvania, Delaware, Maryland, Virginia, New York, Florida and New Jersey. He has over two decades of engineering experience in the field of wireless communications. Mr. Petersohn is an active member of the National Society of Professional Engineers (NSPE) and the Pennsylvania Society of Professional Engineers (PSPE). Mr. Petersohn further states that all facts and statements contained in the foregoing document are true and accurate to the best of his knowledge. He believes, under penalty of perjury, the foregoing to be correct.

Andrew M. Petersohn, P.E.
Registered Professional Engineer
Pennsylvania license number 073239

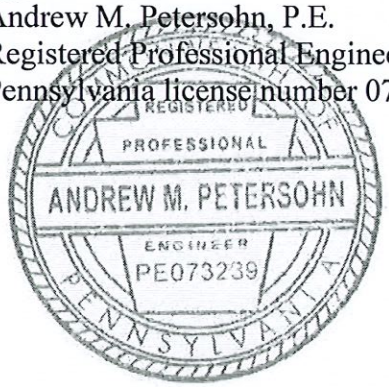

PO Box 165
Fairview Village, PA 19409
Phone: 610.304.2024
Fax: 610.584.5387
info@dBmEng.com

dBm ENGINEERING, P.C.

RF Services, Inc.
230 Overlook Road | Morgantown, PA 19543

LETTER ON FCC COMPLIANCE AND NON-INTERFERENCE

February 25, 2021
New Cingular Wireless PCS, LLC
d/b/a AT&T Mobility

FCC COMPLIANCE AND NON-INTERFERENCE

PROPOSED AT&T FACILITY: "CON01_003"
139 W. 3RD AVENUE
CONSHOHOCKEN, PA19428

Latitude: N 40° 4' 35.81" (NAD 83)
Longitude: W 75° 18' 24.10" (NAD 83)
Overall Structure Height (AGL): 45' 6"
Ground Elevation (AMSL): 143'

New Cingular Wireless PCS, LLC d/b/a AT&T Mobility (AT&T) is a provider of wireless communication services and is licensed by the Federal Communications Commission (FCC) to operate at a specific radio frequency, or group of frequencies, in and across its licensed area. AT&T does not transmit any radio frequency outside of their licensed frequency bands and operates entirely within the boundaries set forth by the FCC for its license(s); as such interference with municipal emergency, television, and traditional local FM and AM radio systems is avoided. Accordingly, in the unlikely event that interference does occur, AT&T agrees to abide by its existing policy of fully cooperating with the entity experiencing interference to identify and correct, to the extent reasonably possible, any issues caused by its installation and communicating with the entity experiencing interference within the legal parameters set forth under federal law.

As part of their FCC License, AT&T is required to comply with all applicable FCC regulations including safety guidelines and emission standards relating to the use of the radio frequency spectrum and with respect to non-interference.

Respectfully Submitted,

Shaun M Paul

RF Services, Inc.
230 Overlook Drive
Morgantown, PA 19543

GROW SUPPLY
Google
aps_sv.tactile&output=report&image_key=!1e2!2sRdBBm1hJX_KwUAj6cUVSsQ&hl=en&gl=us&cbp=1%2C339%2C%2C0%2C0&has_annotation=1
Image capture: Aug 2019 © 2021 Google United States Terms Report a problem

Sixth Ave
BMT BRYN MAWR TRUST
BMT
Google
Image capture: Nov 2019 © 2021 Google United States Terms Report a problem

NODE NAME: CON01_003
FA: 14823441 USID: 213516
JURISDICTION: CONSHOHOCKEN BOROUGH

DIG ALERT 1-800-242-1776

811 Know what's below. Call before you dig.

48 HOURS BEFORE YOU DIG

GENERAL NOTES

THE FACILITY IS UNMANNED AND NOT FOR HUMAN HABITATION. A TECHNICIAN WILL VISIT THE SITE AS REQUIRED FOR ROUTINE MAINTENANCE. THE PROJECT WILL NOT RESULT IN ANY SIGNIFICANT DISTURBANCE OR EFFECT ON DRAINAGE; NO SANITARY SEWER SERVICE, POTABLE WATER OR TRASH DISPOSAL IS REQUIRED AND NO COMMERCIAL SIGNAGE IS PROPOSED.

SITE INFORMATION

APPLICANT:	AT&T
APPLICANT ADDRESS:	200 N. WARNER RD KING OF PRUSSIA, PA 19406
AT&T PROJECT MANAGER	DONNA KIMZEY–STRIKE
SITE ADDRESS:	139 W. 3RD AVENUE CONSHOHOCKEN, PA 19428
PROPERTY OWNER:	PECO
PROPERTY OWNER ADDRESS:	PECO ENERGY 2301 MARKET STREET PHILADELPHIA, PA 19163
STRUCTURE TYPE:	WOODEN UTILITY POLE
JURISDICTION:	CONSHOHOCKEN BOROUGH
LATITUDE:	40° 4' 35.81" N (40.076614)
LONGITUDE:	75° 18' 24.10" W (–75.306695)
LAT/LONG DATUM:	NAD 83
GROUND ELEVATION:	143'±
POWER	PECO ENERGY
TELCO	ZAYO

IMPORTANT NOTICE

THE EXISTING CONDITIONS REPRESENTED HEREIN ARE BASED ON VISUAL OBSERVATIONS AND INFORMATION PROVIDED BY OTHERS. CONTRACTOR SHALL VISIT THE SITE AND VERIFY ALL EXISTING CONDITIONS PRIOR TO CONSTRUCTION. REPORT AND CONFLICTS OR DISCREPANCIES PRIOR TO CONSTRUCTION.

VICINITY MAP

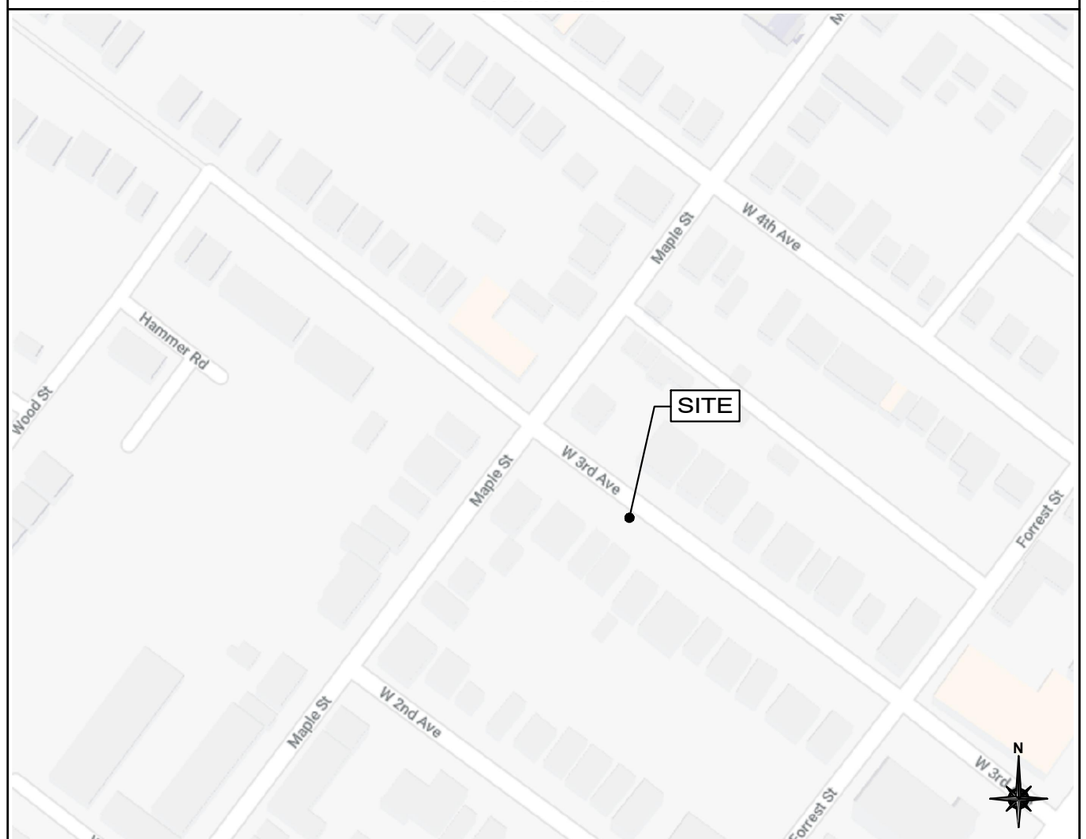

DRIVING DIRECTIONS

DIRECTIONS FROM 200 N. WARNER RD, KING OF PRUSSIA, PA 19406.
HEAD NORTH TOWARD N WARNER RD. TURN LEFT TOWARD N WARNER RD. TURN RIGHT ONTO N WARNER RD. TURN RIGHT ONTO N GULPH RD. TURN RIGHT ONTO US–202 S/W DEKALB PIKE. USE THE RIGHT 2 LANES TO MERGE ONTO I–76 E TOWARD PHILADELPHIA. TAKE EXIT 331B FOR I–476 TOWARD PLYMOUTH MTG/CONSHOHOCKEN. KEEP RIGHT, FOLLOW SIGNS FOR PA–23. TURN RIGHT ONTO MATSONFORD RD (SIGNS FOR CONSHOHOCKEN/PA–23). CONTINUE ONTO FAYETTE ST/MATSONFORD BRIDGE ST. TURN LEFT ONTO W ELM ST. TURN RIGHT ONTO MAPLE ST. TURN RIGHT ONTO W. 3RD AVE TO SIGHT.

SCOPE OF WORK

INSTALL WIRELESS COMMUNICATIONS ANTENNA AND ASSOCIATED SUPPORT EQUIPMENT ON THE EXISTING PRIMARY UTILITY POLE.

CODES

2018 INTERNATIONAL BUILDING CODE
2017 NATIONAL ELECTRICAL CODE
STRUCTURAL STANDARD FOR STEEL ANTENNA TOWER AND ANTENNA SUPPORTING STRUCTURES TO TIA–222–H
SUBCONTRACTOR'S WORK SHALL COMPLY WITH ALL APPLICABLE NATIONAL, STATE, AND LOCAL CODES AS ADOPTED BY THE LOCAL AUTHORITY HAVING JURISDICTION FOR THE LOCATION. THE EDITION OF THE ADOPTED CODES AND STANDARDS IN EFFECT ON THE DATE OF CONTRACT AWARD SHALL GOVERN THE DESIGN
AT&T STANDARDS: ATT–TP 76300, ATT–TP 76416 & UPDATES AS REQUIRED
FOR ANY CONFLICTS BETWEEN SECTIONS OF LISTED CODES AND STANDARDS REGARDING MATERIAL METHODS OF CONSTRUCTION, OR OTHER REQUIREMENTS, THE MOST RESTRICTIVE REQUIREMENT SHALL GOVERN. WHERE THERE IS CONFLICT BETWEEN A GENERAL REQUIREMENT AND A SPECIFIC REQUIREMENT, THE SPECIFIC REQUIREMENT SHALL GOVERN.

DRAWING INDEX

SHEET NO:	SHEET TITLE
T–1	TITLE SHEET
C–1	SITE PLAN
C–2	POLE ELEVATIONS
C–3	POLE ELEVATIONS
C–4	PLUMBING & ONE–LINE DIAGRAM
C–5	APPURTENANCE DETAILS
C–6	CONNECTION DETAILS
C–7	LABELING DETAILS
C–8	COLOR CODING DETAILS
G–1	GROUNDING DETAILS
GN–1	GENERAL NOTES
GN–2	GENERAL NOTES
GN–3	GENERAL NOTES

ARCHITECT/ENGINEER

JACOBS ENGINEERING GROUP, INC.
200 NORTH WARNER Rd.
KING OF PRUSSIA, PA 19406
CONTACT: PAUL CHAN P.E.
PROJECT MANAGER
TEL: (484) 322–2069

at&t
200 N. WARNER RD.
KING OF PRUSSIA, PA 19406

JACOBS
Jacobs Telecommunications, Inc.
200 N. WARNER RD., SUITE 203
KING OF PRUSSIA, PA 19406

PROJECT NO:	EP4TURES
DRAWN BY:	B. POTESTA
CHECKED BY:	P. CHAN

3	08.21.20	UPDATED
2	03.04.20	UPDATED
1	08.21.19	UPDATED – POLE RELOCATION
0	11.12.18	FINALS

8-21-2020
COMMONWEALTH OF PENNSYLVANIA
REGISTERED PROFESSIONAL
YAN WONG CHAN
ENGINEER
PE081267

IT IS A VIOLATION OF THE LAW FOR ANY PERSON, UNLESS THEY ARE ACTING UNDER THE DIRECTION OF A LICENSED PROFESSIONAL ENGINEER, TO ALTER THIS DOCUMENT

CON01_003
139 W. 3RD AVENUE
CONSHOHOCKEN, PA 19428

SHEET TITLE
TITLE SHEET

SHEET NUMBER
T-1

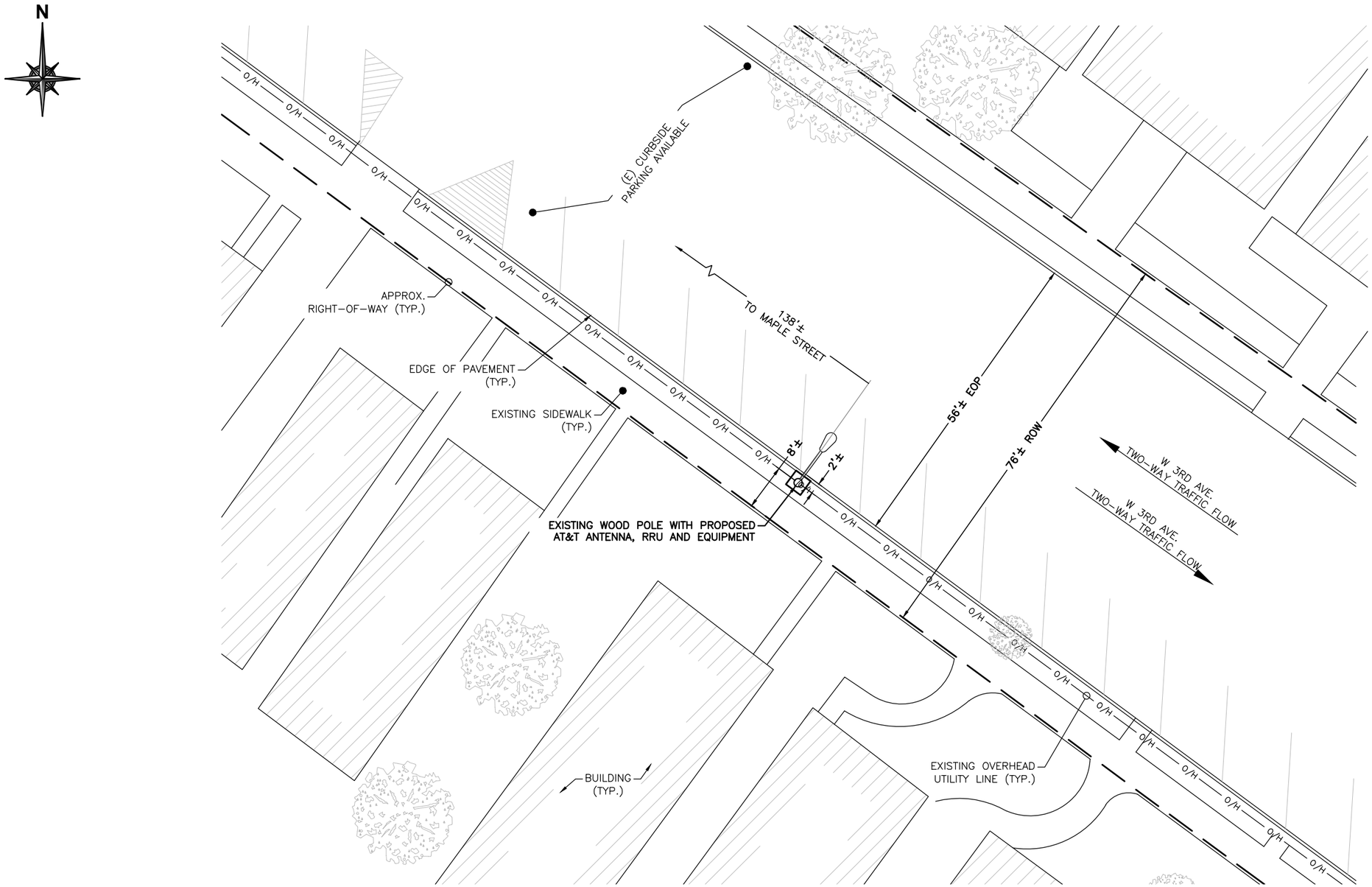

NOTES:

1. SITE AERIAL IMAGE AND NORTH ARROW OBTAINED FROM GOOGLE ON 08/12/19.
2. SOME EXISTING AND PROPOSED INFORMATION NOT SHOWN FOR CLARITY.
3. ALL POWER SOURCE TO BE PROVIDED BY PECO ENERGY AND FIBER SOURCE TO BE PROVIDED BY ZAYO.
4. ALL PROPOSED EQUIPMENT SHALL BE GROUNDED IN ACCORDANCE WITH ATT-TP 76416.

NOTE:
THIS SITE PLAN WAS GENERATED WITHOUT THE USE OF A SURVEY. PROPERTY LINES, RIGHT-OF-WAYS, POWER AND TELCO UTILITY POINT CONNECTIONS/ROUTES AND EASEMENTS SHOWN ON THESE PLANS ARE ESTIMATED. ALL ITEMS AND DIMENSIONS SHOULD BE VERIFIED IN THE FIELD.

1 **SITE PLAN**

SCALE: NOT TO SCALE

at&t
200 N. WARNER RD.
KING OF PRUSSIA, PA 19406

JACOBS
Jacobs Telecommunications, Inc.
200 N. WARNER RD., SUITE 203
KING OF PRUSSIA, PA 19406

PROJECT NO:	EP4TURES
DRAWN BY:	B. POTESTA
CHECKED BY:	P. CHAN

3	08.21.20	UPDATED
2	03.04.20	UPDATED
1	08.21.19	UPDATED – POLE RELOCATION
0	11.12.18	FINALS

8-21-2020

COMMONWEALTH OF PENNSYLVANIA
REGISTERED PROFESSIONAL
YAN WONG CHAN
ENGINEER
PE081267

IT IS A VIOLATION OF THE LAW FOR ANY PERSON, UNLESS THEY ARE ACTING UNDER THE DIRECTION OF A LICENSED PROFESSIONAL ENGINEER, TO ALTER THIS DOCUMENT

CON01_003
139 W. 3RD AVENUE
CONSHOHOCKEN, PA 19428

SHEET TITLE
SITE PLAN

SHEET NUMBER
C-1

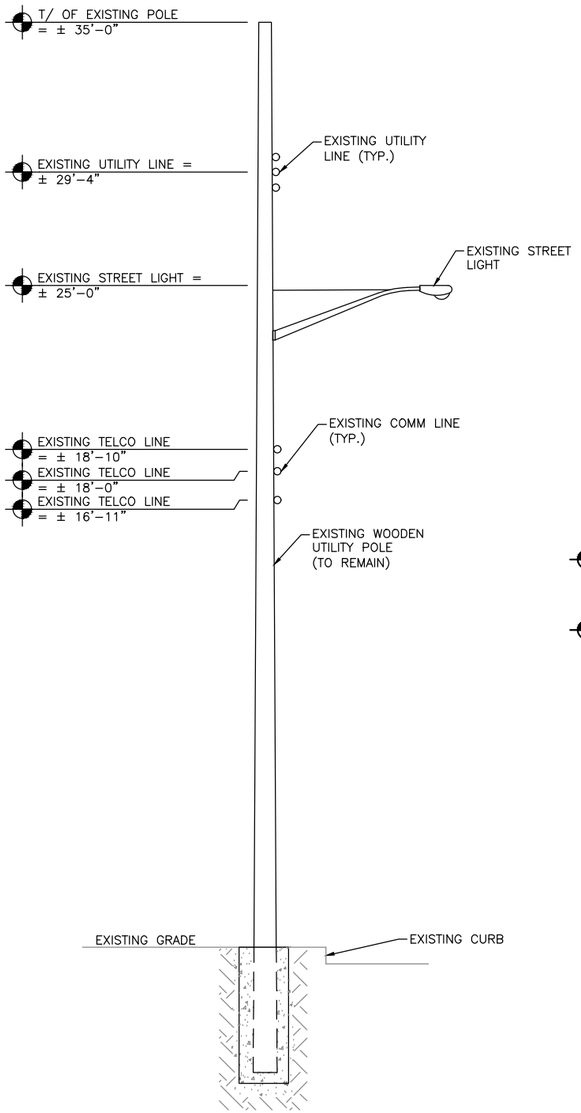

EXISTING SIDE ELEVATION

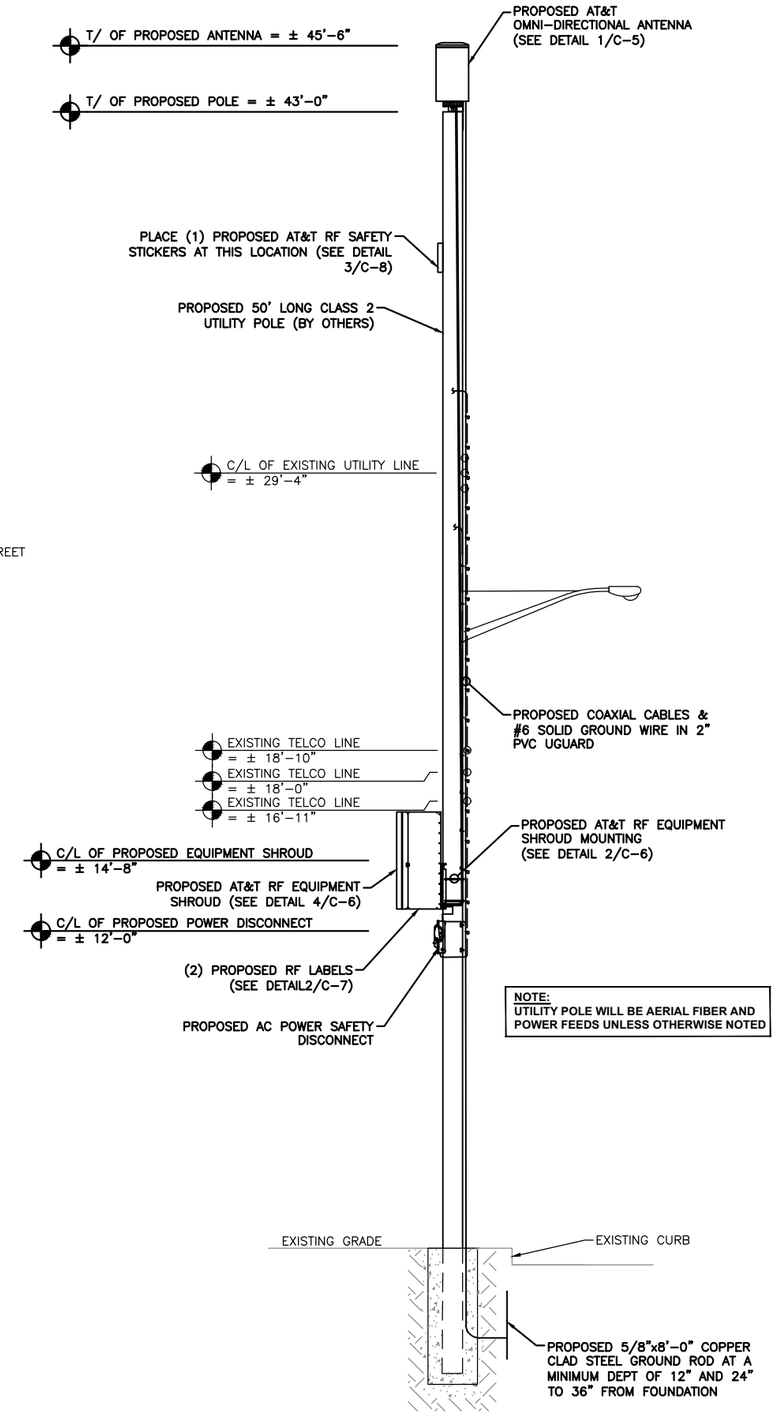

NOTE:
UTILITY POLE WILL BE AERIAL FIBER AND POWER FEEDS UNLESS OTHERWISE NOTED

PROPOSED SIDE ELEVATION

NOTES:

1. CONTRACTOR SHALL REFER TO THE STRUCTURAL ANALYSIS REPORT. NO EQUIPMENT SHALL BE INSTALLED UNLESS IN ACCORDANCE WITH THIS REPORT.
2. ELEVATION BASED ON IKE GPS SURVEY PERFORMED BY JACOBS ENGINEERING GROUP, INC.
3. ALL PROPOSED EQUIPMENT SHALL BE GROUNDED IN ACCORDANCE WITH ATT-TP 76416.
4. ALL PROPOSED HARDWARE SHALL BE STAINLESS STEEL.
5. ALL CONDUIT SHALL BE SECURED EVERY 18" OR LESS.
6. INSTALLERS WORKING IN THE AREA OF THE POLE ABOVE THE NORMAL COMMUNICATION SPACE MUST MEET OSHA 1910.269 REQUIREMENTS.
7. THE POLE/POST OWNER SHOULD ADVISE ALL EMPLOYEES THAT AT&T ANTENNAS ARE LOCATED ON SOME POLES/POSTS AND THAT THE GUIDANCE PROVIDED BY THE SIGNS SHOULD BE FOLLOWED.

at&t
200 N. WARNER RD.
KING OF PRUSSIA, PA 19406

JACOBS
Jacobs Telecommunications, Inc.
200 N. WARNER RD., SUITE 203
KING OF PRUSSIA, PA 19406

PROJECT NO:	EP4TURES
DRAWN BY:	B. POTESTA
CHECKED BY:	P. CHAN

3	08.21.20	UPDATED
2	03.04.20	UPDATED
1	08.21.19	UPDATED – POLE RELOCATION
0	11.12.18	FINALS

8-21-2020
COMMONWEALTH OF PENNSYLVANIA
REGISTERED PROFESSIONAL
YAN WONG CHAN
ENGINEER
PE081267

IT IS A VIOLATION OF THE LAW FOR ANY PERSON, UNLESS THEY ARE ACTING UNDER THE DIRECTION OF A LICENSED PROFESSIONAL ENGINEER, TO ALTER THIS DOCUMENT

CON01_003
139 W. 3RD AVENUE
CONSHOHOCKEN, PA 19428

SHEET TITLE
POLE ELEVATIONS

SHEET NUMBER
C-2

1 **POLE ELEVATIONS**
SCALE: NOT TO SCALE

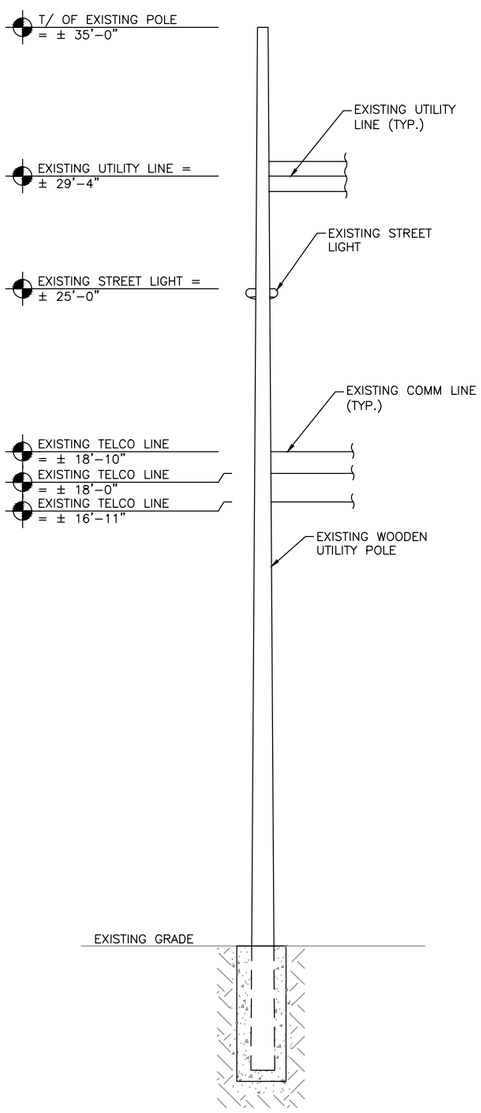

EXISTING BACK ELEVATION

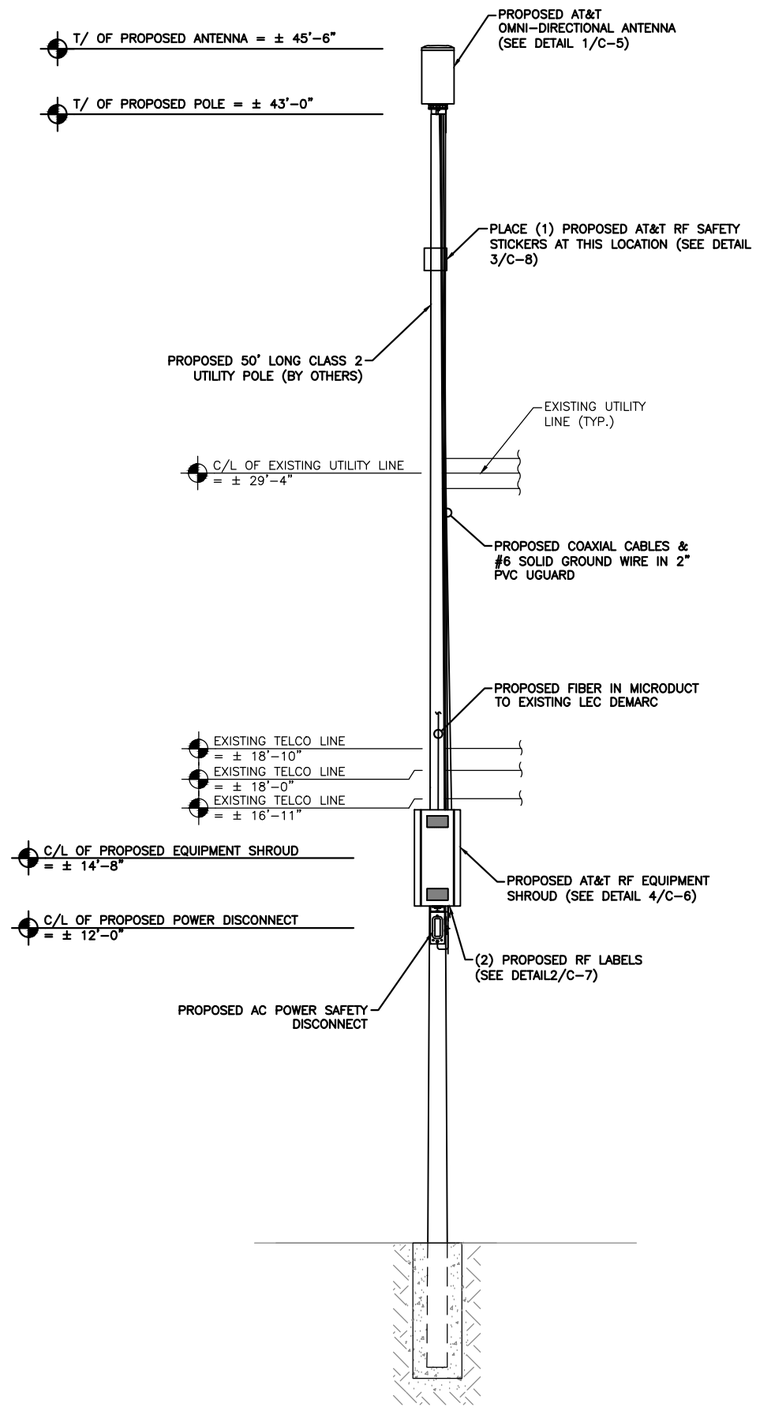

PROPOSED BACK ELEVATION

NOTES:

1. CONTRACTOR SHALL REFER TO THE STRUCTURAL ANALYSIS REPORT. NO EQUIPMENT SHALL BE INSTALLED UNLESS IN ACCORDANCE WITH THIS REPORT.
2. ELEVATION BASED ON IKE GPS SURVEY PERFORMED BY JACOBS ENGINEERING GROUP, INC..
3. ALL PROPOSED EQUIPMENT SHALL BE GROUNDED IN ACCORDANCE WITH ATT-TP 76416.
4. ALL PROPOSED HARDWARE SHALL BE STAINLESS STEEL.
5. ALL CONDUIT SHALL BE SECURED EVERY 18" OR LESS.
6. INSTALLERS WORKING IN THE AREA OF THE POLE ABOVE THE NORMAL COMMUNICATION SPACE MUST MEET OSHA 1910.269 REQUIREMENTS.
7. THE POLE/POST OWNER SHOULD ADVISE ALL EMPLOYEES THAT AT&T ANTENNAS ARE LOCATED ON SOME POLES/POSTS AND THAT THE GUIDANCE PROVIDED BY THE SIGNS SHOULD BE FOLLOWED.

at&t
200 N. WARNER RD.
KING OF PRUSSIA, PA 19406

JACOBS
Jacobs Telecommunications, Inc.
200 N. WARNER RD., SUITE 203
KING OF PRUSSIA, PA 19406

PROJECT NO:	EP4TURES
DRAWN BY:	B. POTESTA
CHECKED BY:	P. CHAN

3	08.21.20	UPDATED
2	03.04.20	UPDATED
1	08.21.19	UPDATED – POLE RELOCATION
0	11.12.18	FINALS

8-21-2020
COMMONWEALTH OF PENNSYLVANIA
REGISTERED PROFESSIONAL
YAN WONG CHAN
ENGINEER
PE081267

IT IS A VIOLATION OF THE LAW FOR ANY PERSON, UNLESS THEY ARE ACTING UNDER THE DIRECTION OF A LICENSED PROFESSIONAL ENGINEER, TO ALTER THIS DOCUMENT

CON01_003
139 W. 3RD AVENUE
CONSHOHOCKEN, PA 19428

SHEET TITLE
POLE ELEVATIONS

SHEET NUMBER
C-3

1 **POLE ELEVATIONS**

SCALE: NOT TO SCALE

Micro cRAN Node Plumbing Diagram
(using 2 Dual-Band 4T4R Radios)

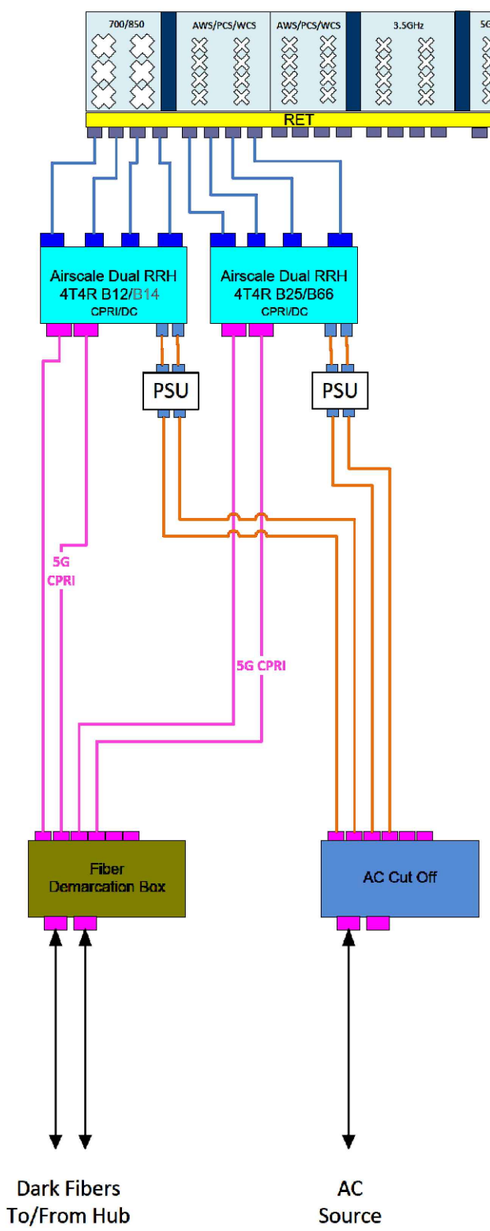

Note:
- B14 should not be activated
- No Unlicensed RRH/LAA for Micro Location
- AC Power (2 power feeds for each radio)
- 2nd CPRI for 5G NR

Construction Requirement:
- 6 Fibers Fronthaul required

1 PLUMBING DIAGRAM

SCALE: NOT TO SCALE

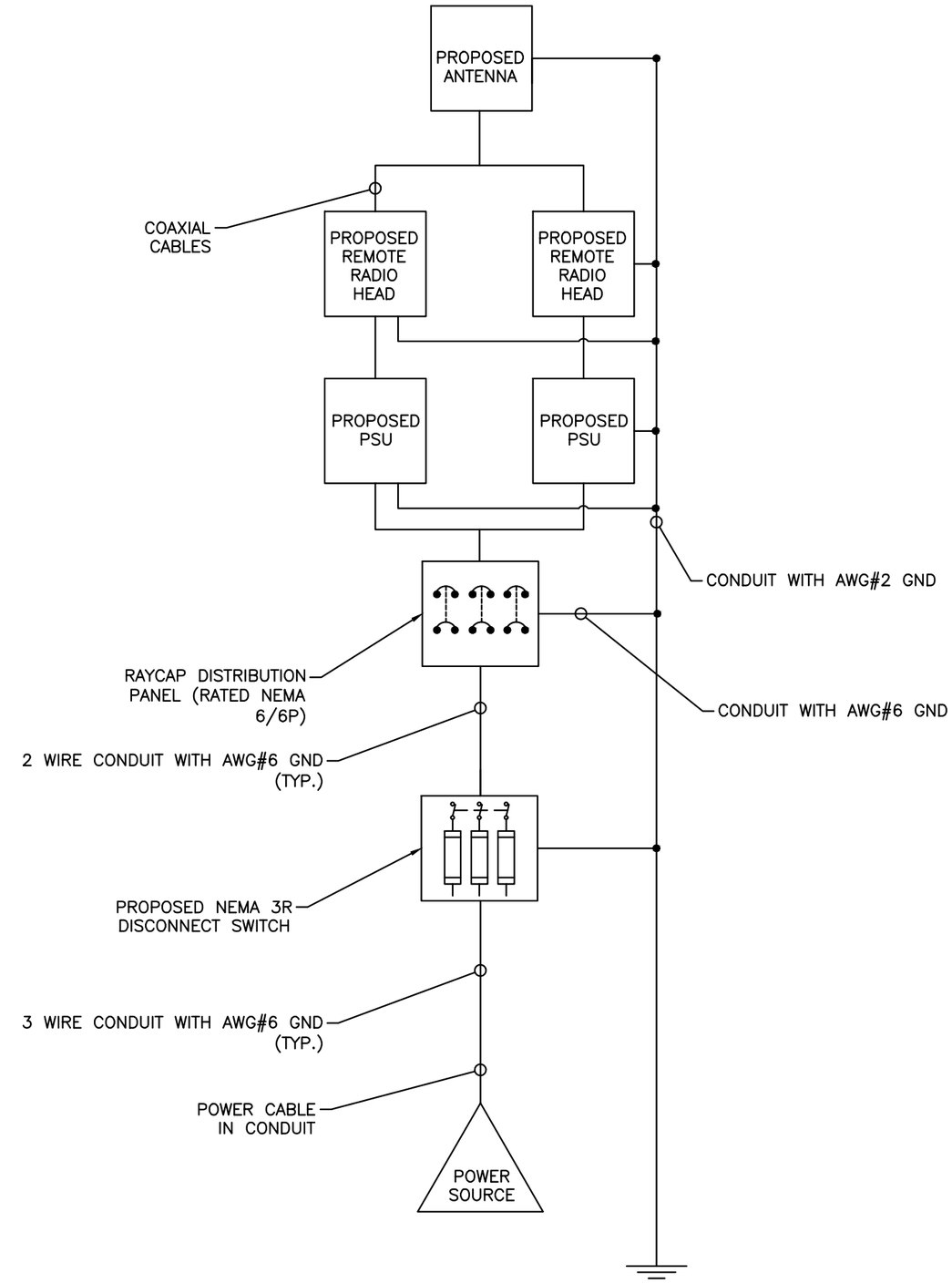

2 ONE-LINE DIAGRAM

SCALE: NOT TO SCALE

at&t
200 N. WARNER RD.
KING OF PRUSSIA, PA 19406

JACOBS
Jacobs Telecommunications, Inc.
200 N. WARNER RD., SUITE 203
KING OF PRUSSIA, PA 19406

PROJECT NO:	EP4TURES
DRAWN BY:	B. POTESTA
CHECKED BY:	P. CHAN

3	08.21.20	UPDATED
2	03.04.20	UPDATED
1	08.21.19	UPDATED – POLE RELOCATION
0	11.12.18	FINALS

8-21-2020
COMMONWEALTH OF PENNSYLVANIA
REGISTERED PROFESSIONAL
YAN WONG CHAN
ENGINEER
PE081267

IT IS A VIOLATION OF THE LAW FOR ANY PERSON, UNLESS THEY ARE ACTING UNDER THE DIRECTION OF A LICENSED PROFESSIONAL ENGINEER, TO ALTER THIS DOCUMENT

CON01_003
139 W. 3RD AVENUE
CONSHOHOCKEN, PA 19428

SHEET TITLE
PLUMBING &
ONE-LINE DIAGRAM

SHEET NUMBER
C-4

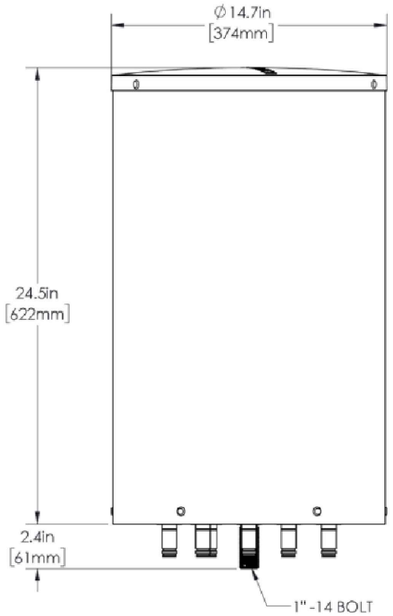

FRONT VIEW

MECHANICAL SPECIFICATIONS

OPERATING TEMPERATURE	−40° TO 158°F
ANTENNA WEIGHT	30.9 LBS (14 KG)
ANTENNA DIAMETER	14.7" (374 MM)
ANTENNA HEIGHT	24.5" (622 MM)
RADOME MATERIAL	ASA
RADOME COLOR	GRAY, BROWN, 3M
WIND SURVIVAL RATING	150mph (241km/h)

1 GALTRONICS GQ2412-06613

SCALE: NOT TO SCALE

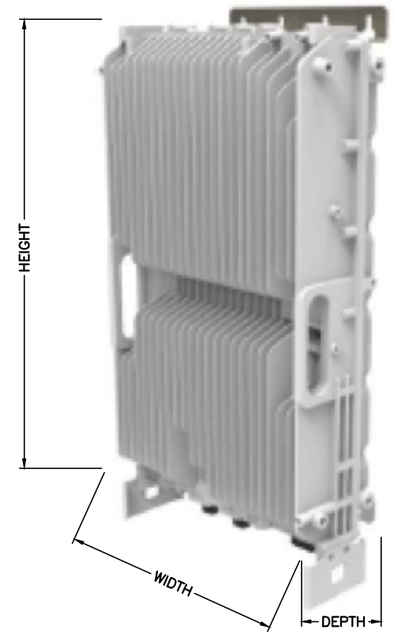

NOKIA RRH MODEL	HEIGHT (INCH)	WIDTH (INCH)	DEPTH (INCH)	WEIGHT (LBS)
AIR SCALE DUAL RRH 4T4R B12/14 320W AHLBA	22.05	12.13	6.97	77.16
AIR SCALE DUAL RRH 4T4R B25/66 320W AHFIB	22.05	12.13	5.86	66.14

2 NOKIA AIRSCALE DUAL RRH DETAIL

SCALE: NOT TO SCALE

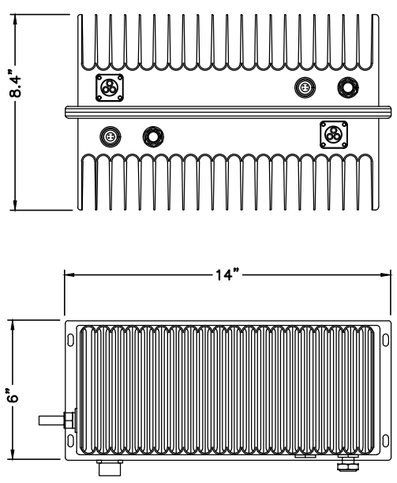

MECHANICAL SPECIFICATIONS

OPERATING TEMPERATURE	−40° TO 272°F
WEIGHT	23.3 LBS (10.60 KG)
HEIGHT	8.4" (213.4 MM)
WIDTH	6" (152.4 MM)
LENGTH	14" (355.6 MM)

3 CCI PSU-1200W-48-X DETAIL

SCALE: NOT TO SCALE

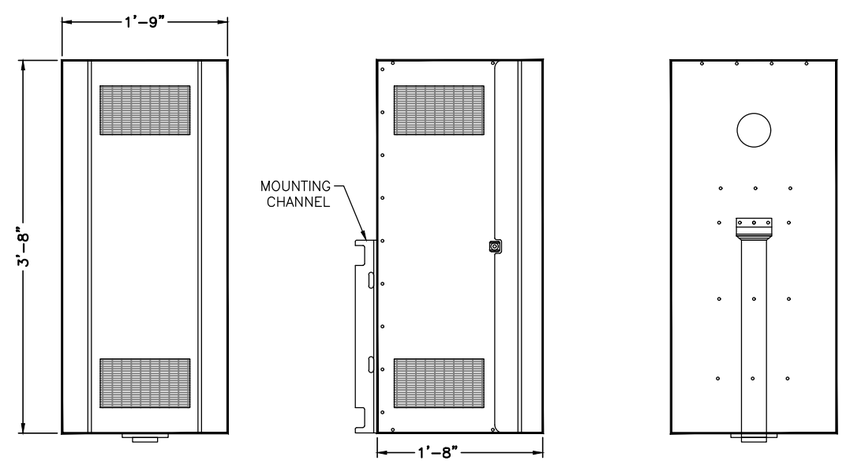

FRONT VIEW

LEFT SIDE VIEW

BACK VIEW

NOTE:
SHROUD SHOULD BE LABELED AT&T MOBILITY, 24 HOURS CONTACT: 800-638-2822

4 EQUIPMENT SHROUD DETAIL

SCALE: NOT TO SCALE

at&t
200 N. WARNER RD.
KING OF PRUSSIA, PA 19406

JACOBS
Jacobs Telecommunications, Inc.
200 N. WARNER RD., SUITE 203
KING OF PRUSSIA, PA 19406

PROJECT NO:	EP4TURES
DRAWN BY:	B. POTESTA
CHECKED BY:	P. CHAN

3	08.21.20	UPDATED
2	03.04.20	UPDATED
1	08.21.19	UPDATED – POLE RELOCATION
0	11.12.18	FINALS

8-21-2020
COMMONWEALTH OF PENNSYLVANIA
REGISTERED PROFESSIONAL
YAN WONG CHAN
ENGINEER
PE081267

IT IS A VIOLATION OF THE LAW FOR ANY PERSON, UNLESS THEY ARE ACTING UNDER THE DIRECTION OF A LICENSED PROFESSIONAL ENGINEER, TO ALTER THIS DOCUMENT

CON01_003
139 W. 3RD AVENUE
CONSHOHOCKEN, PA 19428

SHEET TITLE
APPURTENANCE DETAILS

SHEET NUMBER
C-5

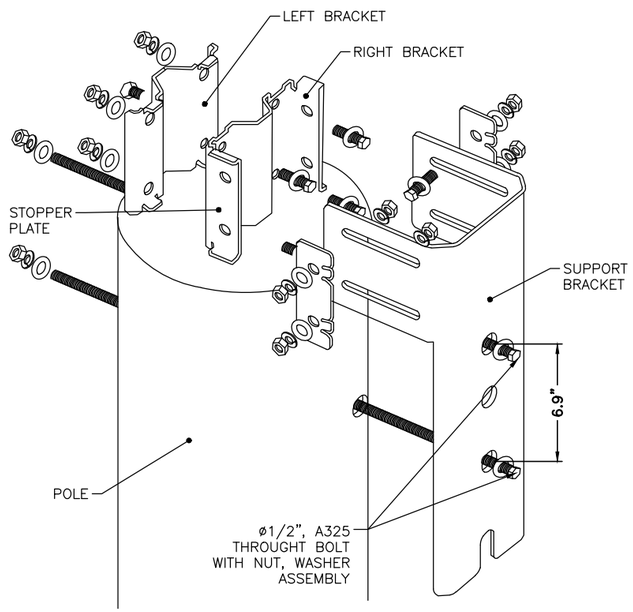

1 ANTENNA MOUNTING DETAIL

SCALE: NOT TO SCALE

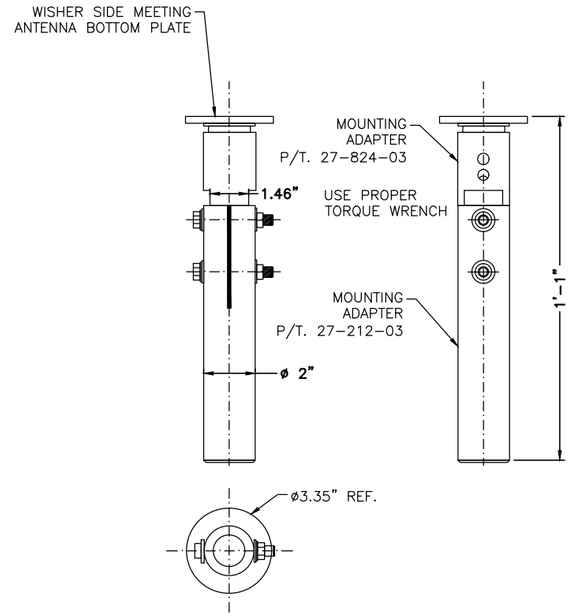

2 ANTENNA MOUNTING BRACKET

SCALE: NOT TO SCALE

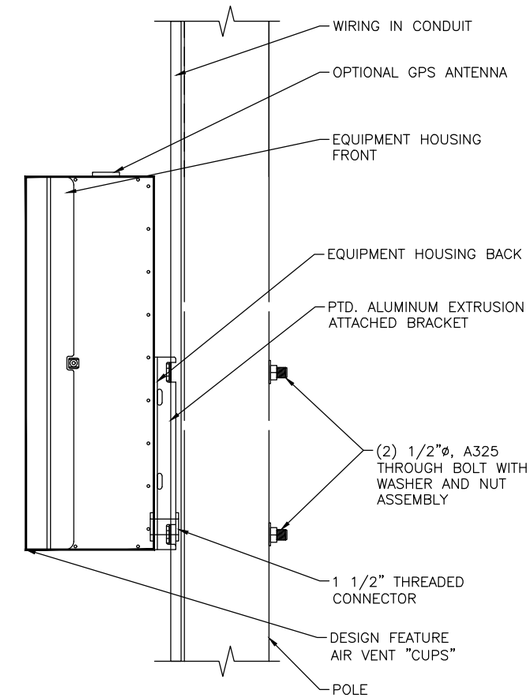

3 RRH SHROUD FRONT SIDE VIEW

SCALE: NOT TO SCALE

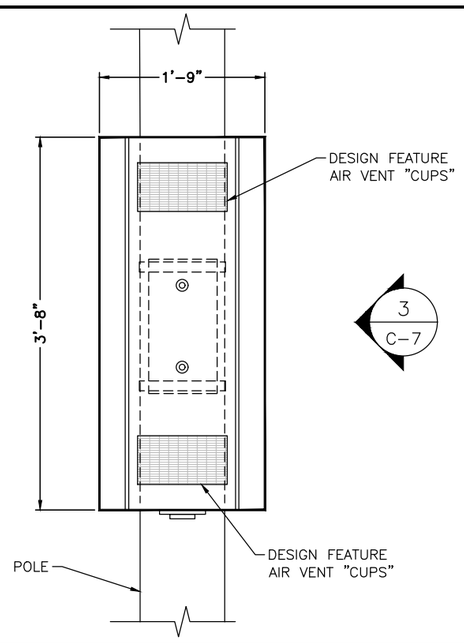

4 RRH SHROUD FRONT VIEW

SCALE: NOT TO SCALE

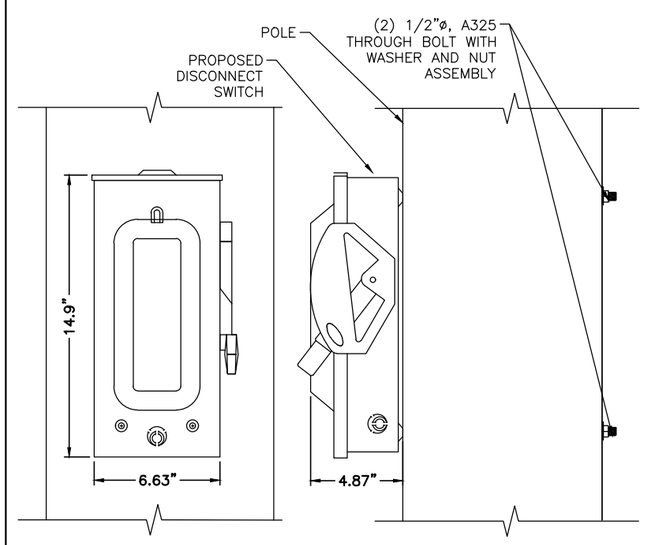

5 DISCONNECT SWITCH MOUNTING

SCALE: NOT TO SCALE

6 NOT USED

SCALE: NOT TO SCALE

at&t
200 N. WARNER RD.
KING OF PRUSSIA, PA 19406

JACOBS
Jacobs Telecommunications, Inc.
200 N. WARNER RD., SUITE 203
KING OF PRUSSIA, PA 19406

PROJECT NO:	EP4TURES
DRAWN BY:	B. POTESTA
CHECKED BY:	P. CHAN

3	08.21.20	UPDATED
2	03.04.20	UPDATED
1	08.21.19	UPDATED – POLE RELOCATION
0	11.12.18	FINALS

8-21-2020

COMMONWEALTH OF PENNSYLVANIA
REGISTERED PROFESSIONAL
YAN WONG CHAN
ENGINEER
PE081267

IT IS A VIOLATION OF THE LAW FOR ANY PERSON, UNLESS THEY ARE ACTING UNDER THE DIRECTION OF A LICENSED PROFESSIONAL ENGINEER, TO ALTER THIS DOCUMENT

CON01_003
139 W. 3RD AVENUE
CONSHOHOCKEN, PA 19428

SHEET TITLE
CONNECTION DETAILS

SHEET NUMBER
C-6

DMARC LABEL REQUIREMENTS

LINE 1: FIBER CABLE & COUNT
LINE 2: JACK #

DMARC FIBER LABEL REQUIREMENTS

LINE 1: FIBER CABLE, COUNT AND JACK #
LINE 2: RADIO COMMON ID AND CPRI PORT

RADIO LABEL REQUIREMENTS

LINE 1: RADIO COMMON ID
LINE 2: NODE USID

RADIO FIBER LABEL REQUIREMENTS

LINE 1: RADIO COMMON ID AND CPRI PORT
LINE 2: FIBER CABLE, COUNT AND JACK #

1 NODE LABELING

SCALE: NOT TO SCALE

NOTICE

RF ENERGY EMITTED BY THIS DEVICE MAY EXCEED THE FCC'S GENERAL PUBLIC EXPOSURE LIMITS. STAY AT LEAST ONE FOOT (1') AWAY FROM THE DEVICE. CALL 800-638-2822 FOR HELP IF YOU NEED ACCESS WITHIN ONE FOOT (1').

NOTE:

TWO 1"X6" NOTICE DECALS SHALL BE PLACED ON OPPOSITE SIDES OF THE SHROUD.

2 SHROUD LABEL

SCALE: NOT TO SCALE

NOTICE

AT&T operates antennas at this structure.

Above this point you are entering an area where radio frequency (RF) fields may exceed the FCC General Population exposure limits.

Follow satety guidelines for working in an RF environment.

Keep 16 ft. away from the fronts of the antennas.

Contact AT&T at 800-638-2822, opt. 9, 3 and follow their instructions prior to performing any maintenance or repairs above this point.

This is AT&T Site USID 213516

NOTE:

ONE 12.25"X12.25" POLYETHYLENE RF SIGN SHALL BE PLACED ON THE POLE AT 5'-0" BELOW THE BOTTOM OF THE ANTENNA.

3 RF SAFETY SIGN

SCALE: NOT TO SCALE

4 NOT USED

SCALE: NOT TO SCALE

at&t
200 N. WARNER RD.
KING OF PRUSSIA, PA 19406

JACOBS
Jacobs Telecommunications, Inc.
200 N. WARNER RD., SUITE 203
KING OF PRUSSIA, PA 19406

PROJECT NO:	EP4TURES
DRAWN BY:	B. POTESTA
CHECKED BY:	P. CHAN

3	08.21.20	UPDATED
2	03.04.20	UPDATED
1	08.21.19	UPDATED – POLE RELOCATION
0	11.12.18	FINALS

8-21-2020

COMMONWEALTH OF PENNSYLVANIA
REGISTERED PROFESSIONAL
YAN WONG CHAN
ENGINEER
PE081267

IT IS A VIOLATION OF THE LAW FOR ANY PERSON, UNLESS THEY ARE ACTING UNDER THE DIRECTION OF A LICENSED PROFESSIONAL ENGINEER, TO ALTER THIS DOCUMENT

CON01_003
139 W. 3RD AVENUE
CONSHOHOCKEN, PA 19428

SHEET TITLE

LABELING DETAILS

SHEET NUMBER

C-7

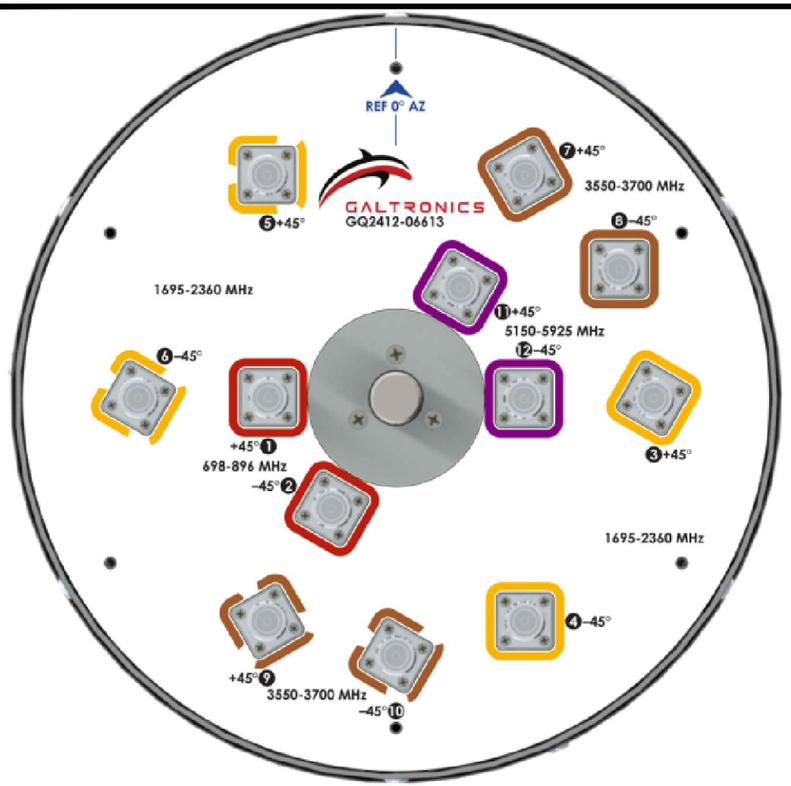

1 OMNI ANTENNA COLOR CODE

SCALE: NOT TO SCALE

2 NOT USED

SCALE: NOT TO SCALE

3 NOT USED

SCALE: NOT TO SCALE

4 NOT USED

SCALE: NOT TO SCALE

at&t
200 N. WARNER RD.
KING OF PRUSSIA, PA 19406

JACOBS
Jacobs Telecommunications, Inc.
200 N. WARNER RD., SUITE 203
KING OF PRUSSIA, PA 19406

PROJECT NO:	EP4TURES
DRAWN BY:	B. POTESTA
CHECKED BY:	P. CHAN

3	08.21.20	UPDATED
2	03.04.20	UPDATED
1	08.21.19	UPDATED – POLE RELOCATION
0	11.12.18	FINALS

8-21-2020

COMMONWEALTH OF PENNSYLVANIA
REGISTERED PROFESSIONAL
YAN WONG CHAN
ENGINEER
PE081267

IT IS A VIOLATION OF THE LAW FOR ANY PERSON, UNLESS THEY ARE ACTING UNDER THE DIRECTION OF A LICENSED PROFESSIONAL ENGINEER, TO ALTER THIS DOCUMENT

CON01_003
139 W. 3RD AVENUE
CONSHOHOCKEN, PA 19428

SHEET TITLE
COLOR CODING DETAILS

SHEET NUMBER
C-8

NOTE:
CONTRACTOR TO SURROUND COMPLETED CONNECTION WITH HEAT-SHRINK TUBING TO ENSURE WEATHER PROOF CONNECTION.

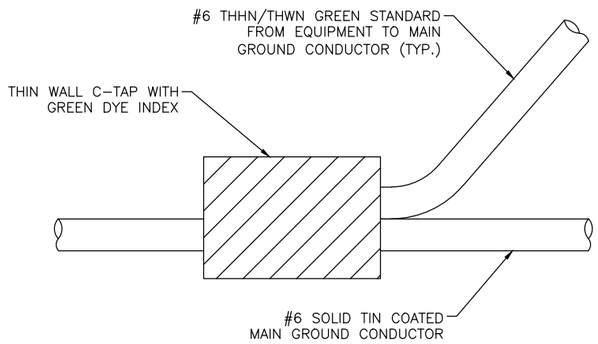

1 C-TAP DETAIL

SCALE: NOT TO SCALE

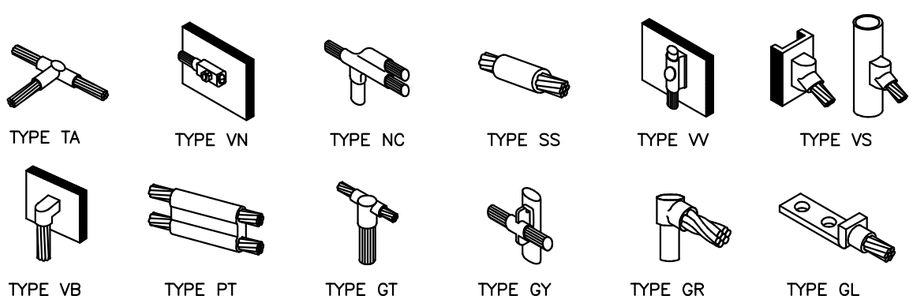

NOTE:

ERICO EXOTHERMIC "MOLD TYPES" SHOWN HERE ARE EXAMPLES. CONSULT WITH PROJECT MANAGER FOR SPECIFIC MOLDS TO BE USED FOR THIS PROJECT.

2 WELD CONNECTION DETAILS

SCALE: NOT TO SCALE

NOTE:
GROUNDING RISER FOR DIAGRAMMATIC PURPOSES ONLY. SEE ELEVATION DRAWING FOR EQUIPMENT AND ANTENNA LOCATIONS.

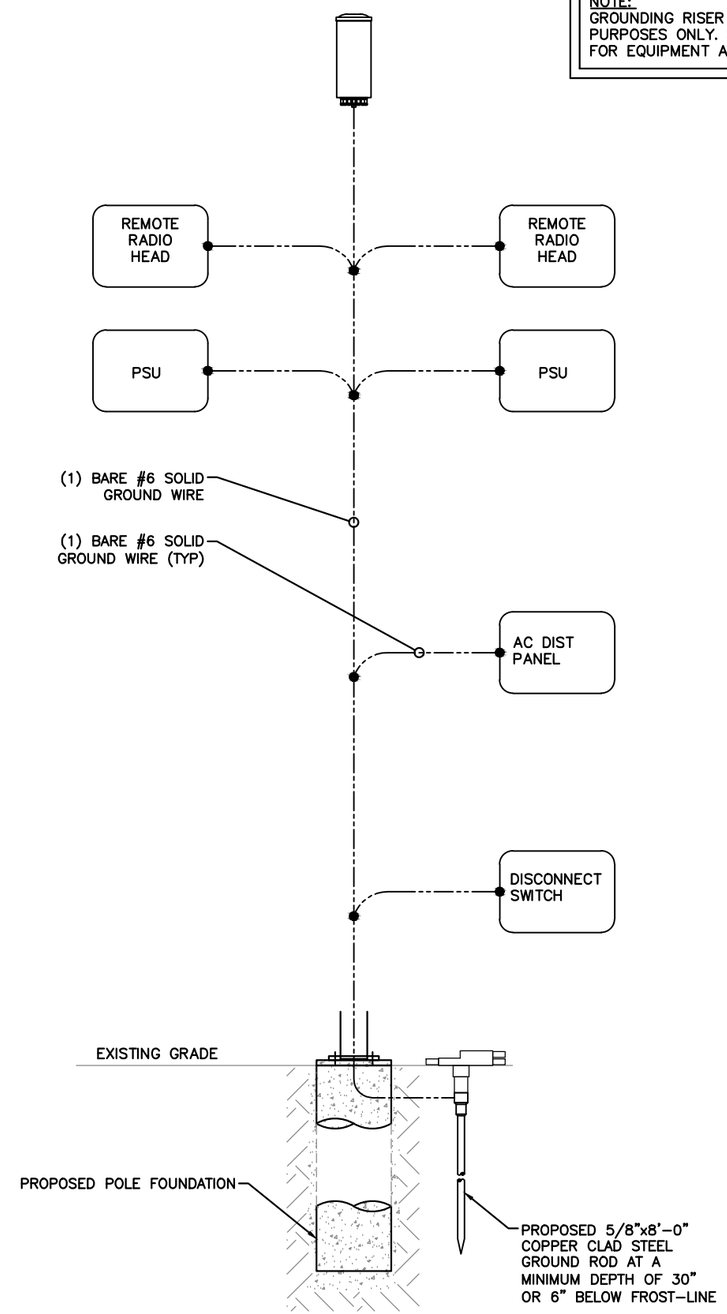

3 GROUNDING RISER DIAGRAM

SCALE: NOT TO SCALE

at&t
200 N. WARNER RD.
KING OF PRUSSIA, PA 19406

JACOBS
Jacobs Telecommunications, Inc.
200 N. WARNER RD., SUITE 203
KING OF PRUSSIA, PA 19406

PROJECT NO:	EP4TURES
DRAWN BY:	B. POTESTA
CHECKED BY:	P. CHAN

3	08.21.20	UPDATED
2	03.04.20	UPDATED
1	08.21.19	UPDATED – POLE RELOCATION
0	11.12.18	FINALS

8-21-2020
COMMONWEALTH OF PENNSYLVANIA
REGISTERED PROFESSIONAL
YAN WONG CHAN
ENGINEER
PE081267

IT IS A VIOLATION OF THE LAW FOR ANY PERSON, UNLESS THEY ARE ACTING UNDER THE DIRECTION OF A LICENSED PROFESSIONAL ENGINEER, TO ALTER THIS DOCUMENT

CON01_003
139 W. 3RD AVENUE
CONSHOHOCKEN, PA 19428

SHEET TITLE
GROUNDING DETAILS

SHEET NUMBER
G-1

GENERAL CONSTRUCTION NOTES:

1. ALL WORK SHALL CONFORM TO THE REQUIREMENTS OF THE LOCAL BUILDING CODE, THE LATEST ADOPTED EDITION AND ALL OTHER APPLICABLE CODES AND ORDINANCES.

2. CONTRACTOR SHALL CONSTRUCT SITE IN ACCORDANCE WITH THESE DRAWINGS AND LATEST JACOBS CONSTRUCTION STANDARDS. THE SPECIFICATION IS THE RULING DOCUMENT AND ANY DISCREPANCIES BETWEEN THE SPECIFICATION AND THE CONSTRUCTION DRAWINGS SHALL BE BROUGHT TO THE ATTENTION OF THE ARCHITECT/ENGINEER OR JACOBS CM PRIOR TO THE COMMENCEMENT OF WORK.

3. CONTRACTOR SHALL VISIT THE JOB SITE AND SHALL FAMILIARIZE THEMSELVES WITH ALL CONDITIONS AFFECTING THE PROPOSED WORK AND SHALL MAKE PROVISIONS AS TO THE COST THEREOF. CONTRACTOR SHALL BE RESPONSIBLE FOR FAMILIARIZING THEMSELVES WITH ALL CONTRACT DOCUMENTS, FIELD CONDITIONS AND DIMENSIONS AND CONFIRMING THAT THE WORK MAY BE ACCOMPLISHED, AS SHOWN, PRIOR TO PROCEEDING WITH CONSTRUCTION. ANY DISCREPANCIES SHALL BE BROUGHT TO THE ATTENTION OF THE ARCHITECT/ENGINEER OR JACOBS CM PRIOR TO THE COMMENCEMENT OF WORK. NO COMPENSATION WILL BE AWARDED BASED ON CLAIM OF LACK OF KNOWLEDGE OF FIELD CONDITIONS.

4. IT IS NOT THE INTENT OF THESE PLANS TO SHOW EVERY MINOR DETAIL OF CONSTRUCTION. CONTRACTOR IS REQUIRED TO FURNISH AND INSTALL ANY/ALL ITEMS FOR A COMPLETE AND FULLY FUNCTIONAL SYSTEM SUBJECT ONLY TO OWNER-SUPPLIED ITEMS. CONTRACTOR SHALL PROVIDE ANY/ALL REQUIREMENTS FOR THE EQUIPMENT TO BE PLACED IN PROPER WORKING ORDER.

5. PLANS ARE NOT TO BE SCALED. THESE PLANS ARE INTENDED TO BE A DIAGRAMMATIC OUTLINE ONLY UNLESS OTHERWISE NOTED. THE WORK SHALL INCLUDE FURNISHING MATERIALS, EQUIPMENT AND APPURTENANCES, AND LABOR NECESSARY TO EFFECT ALL INSTALLATIONS AS INDICATED ON THE DRAWINGS. OWNER PROVIDED AND CONTRACTOR INSTALLED MATERIALS WILL INCLUDE THE FOLLOWING, UNLESS NOTED OTHERWISE:

   A) TRANSMITTER
   B) UHF ANTENNA AND MOUNTING BRACKETS, GPS ANTENNAS AND KU ANTENNAS
   C) UHF COAX AND HANGERS
   D) INTEGRATED LOAD CENTER

6. DIMENSIONS SHOWN ARE TO FINISH SURFACES UNLESS OTHERWISE NOTED. SPACING BETWEEN EQUIPMENT IS REQUIRED CLEARANCE. THEREFORE, IT IS CRITICAL TO FIELD VERIFY DIMENSIONS. SHOULD THERE BE ANY QUESTIONS REGARDING THE CONTRACT DOCUMENTS, EXISTING CONDITIONS AND/OR DESIGN INTENT, THE CONTRACTOR SHALL BE RESPONSIBLE FOR REPORTING ANY DISCREPANCIES TO THE ATTENTION OF THE JACOBS CM, IN WRITING, PRIOR TO THE COMMENCEMENT OF WORK.

7. DETAILS PROVIDED ARE FOR THE PURPOSE OF SHOWING DESIGN INTENT. MODIFICATIONS MAY BE REQUIRED TO SUIT JOB DIMENSIONS OR SITE CONDITIONS, AND SUCH MODIFICATIONS SHALL BE INCLUDED AS PART OF THE WORK.

8. CONTRACTOR SHALL PAY FOR APPLICABLE PERMITS, FEES, INSPECTIONS AND TESTING. CONTRACTOR IS TO OBTAIN PERMITS AND APPROVED SUBMITTALS PRIOR TO ORDERING MATERIALS AND THE COMMENCEMENT OF WORK.

9. THE TERM "PROVIDE" USED IN CONSTRUCTION DOCUMENTS AND SPECIFICATIONS, INDICATES THAT THE CONTRACTOR SHALL FURNISH AND INSTALL,

10. CONTRACTOR SHALL RECEIVE CLARIFICATION IN WRITING, AND SHALL RECEIVE IN WRITING AUTHORIZATION TO PROCEED BEFORE STARTING WORK ON ANY ITEMS NOT CLEARLY DEFINED OR IDENTIFIED BY THE CONTRACT DOCUMENTS.

11. CONTRACTOR SHALL SUPERVISE AND DIRECT THE WORK USING ACCEPTED INDUSTRY-STANDARD SKILLS AND ATTENTION. CONTRACTOR SHALL BE SOLELY RESPONSIBLE FOR CONSTRUCTION MEANS, METHODS, TECHNIQUES, SEQUENCES AND PROCEDURES AND FOR COORDINATING ALL PORTIONS OF THE WORK UNDER CONTRACT, UNLESS OTHERWISE NOTED.

12. CONTRACTOR SHALL BE RESPONSIBLE FOR THE SAFETY OF THE WORK AREA, ADJACENT AREAS AND BUILDING OCCUPANTS THAT ARE LIKELY TO BE AFFECTED BY THE WORK UNDER THIS CONTRACT. WORK SHALL CONFORM TO ALL OSHA REQUIREMENTS.

13. CONTRACTOR SHALL COORDINATE THEIR WORK WITH THE JACOBS CM AND SCHEDULE THEIR ACTIVITIES AND WORKING HOURS IN ACCORDANCE WITH THE REQUIREMENTS.

14. CONTRACTOR SHALL BE RESPONSIBLE FOR COORDINATING THEIR WORK WITH THE WORK OF OTHERS AS IT MAY RELATE TO RADIO EQUIPMENT, ANTENNAS AND ANY OTHER PORTIONS OF THE WORK.

15. CONTRACTOR SHALL INSTALL ALL EQUIPMENT AND MATERIALS IN ACCORDANCE WITH MANUFACTURERS RECOMMENDATIONS UNLESS SPECIFICALLY OTHERWISE INDICATED OR WHERE LOCAL CODES OR REGULATIONS TAKE PRECEDENCE.

16. CONTRACTOR SHALL MAKE NECESSARY PROVISIONS TO PROTECT EXISTING SURFACES, EQUIPMENT, IMPROVEMENTS, PIPING ETC. AND IMMEDIATE REPAIR, TO NEW CONDITION, ANY DAMAGE THAT OCCURS DURING CONSTRUCTION AT THE SOLE COST OF THE CONTRACTOR.

17. IN DRILLING HOLES, OR CORING, INTO CONCRETE WHETHER FOR FASTENING OR ANCHORING PURPOSES, OR PENETRATIONS THROUGH THE FLOOR FOR CONDUIT RUNS, PIPE RUNS ETC. MUST BE CLEARLY UNDERSTOOD THAT REINFORCING STEEL SHALL NOT BE DRILLED INTO, CUT OR DAMAGED UNDER ANY CIRCUMSTANCES (UNLESS NOTED OTHERWISE). LOCATIONS OF REINFORCING STEEL ARE NOT DEFINITELY KNOWN AND THEREFORE MUST BE LOCATED BY THE CONTRACTOR USING APPROPRIATE METHODS AND EQUIPMENT PRIOR TO ANY DRILLING OR CORING OPERATIONS IN EXITING CONCRETE.

18. CONTRACTOR SHALL REPAIR, TO NEW CONDITION, ALL EXISTING WALL SURFACES DAMAGED DURING CONSTRUCTION SUCH THAT THEY MATCH AND BLEND IN WITH ADJACENT SURFACES.

19. CONTRACTOR SHALL SEAL PENETRATIONS THROUGH FIRE RATED ASSEMBLIES OR MATERIALS WITH U.L. LISTED AND FIRE CODE APPROVED MATERIALS AND SYSTEMS THAT MEET OR EXCEED THE RATING OF THE ASSEMBLY IN WHICH THE NEW PENETRATION IS PLACED.

20. CONTRACTOR SHALL KEEP CONTRACT AREA CLEAN, HAZARD FREE, AND DISPOSE OF ALL DIRT, DEBRIS AND RUBBISH. EQUIPMENT NOT SPECIFIED AS REMAINING ON THE PROPERTY OF THE OWNER SHALL BE REMOVED. LEAVE PREMISES IN CLEAN CONDITION AND FREE FROM PAINT SPOTS, DUST OR SMUDGES OF ANY NATURE. CONTRACTOR SHALL BE RESPONSIBLE FOR MAINTAINING ALL ITEMS UNTIL COMPLETION OF CONSTRUCTION.

21. MINIMUM BEND RADIUS OF ANTENNA CABLES SHALL BE IN ACCORDANCE WITH CABLE MANUFACTURERS RECOMMENDATIONS.

22. CONTRACTOR SHALL MINIMIZE DISTURBANCE TO EXISTING SITE DURING CONSTRUCTION. EROSION CONTROL MEASURES, IF REQUIRED DURING CONSTRUCTION SHALL BE IN CONFORMANCE WITH JURISDICTIONAL OR STATE AND LOCAL GUIDELINES FOR EROSION AND SEDIMENT CONTROL AND COORDINATED WITH LOCAL REGULATORY AUTHORITIES. CONTRACTOR SHALL BE RESPONSIBLE FOR MAINTENANCE OF ANY EROSION CONTROL MEASURES, RECORD-KEEPING, MONITORING, AND REPORTING TO THE OWNER AND REGULATORY AUTHORITIES.

23. ALL CONSTRUCTION WORK IS TO ADHERE TO APPLICANT'S INTEGRATED CONSTRUCTION STANDARDS UNLESS STATE OR LOCAL CODE IS MORE STRINGENT.

24. THE INTENT OF THE PLANS AND SPECIFICATIONS IS TO PERFORM THE CONSTRUCTION IN ACCORDANCE PER STATE BUILDING STANDARDS CODE AND STATE CODE OF REGULATIONS, SHOULD ANY CONDITIONS DEVELOP NOT COVERED BY THE APPROVED PLANS AND SPECIFICATIONS WHEREIN THE FINISHED WORK WILL NOT COMPLY PER STATE CODE OF REGULATIONS, A SCOPE OF WORK DETAILING AND SPECIFYING THE REQUIRED WORK SHALL BE SUBMITTED TO AND APPROVED BY THE JURISDICTION BEFORE PROCEEDING WITH THE WORK. A CHANGE ORDER FOR THAT SCOPE SHALL BE SUBMITTED TO THE JACOBS CM PRIOR TO PROCEEDING WITH THE WORK.

25. ADEQUATE AND REQUIRED LIABILITY INSURANCE SHALL BE PROVIDED BY THE CONTRACTOR FOR PROTECTION AGAINST PUBLIC LOSS AND ANY/ALL PROPERTY DAMAGE FOR THE DURATION OF WORK.

26. CONTRACTOR SHALL GUARANTEE ANY/ALL MATERIALS AND WORK FREE FROM DEFECTS FOR A PERIOD OF NOT LESS THAN ONE YEAR FROM DATE OF ACCEPTANCE. ANY CORRECTIVE WORK SHALL BE COMPLETED AT THE SOLE COST OF THE CONTRACTOR.

ELECTRICAL NOTES:

1. ELECTRICAL CONTRACTOR SHALL SUPPLY AND INSTALL ANY/ALL ELECTRICAL WORK INDICATED. ANY/ALL CONSTRUCTION SHALL BE IN ACCORDANCE WITH DRAWINGS AND ANY/ALL APPLICABLE SPECIFICATIONS. IF ANY PROBLEMS ARE ENCOUNTERED BY COMPLYING WITH THESE REQUIREMENTS, CONTRACTOR SHALL NOTIFY JACOBS CM AS SOON AS POSSIBLE, AFTER THE DISCOVERY OF THE PROBLEMS, AND SHALL NOT PROCEED WITH THAT PORTION OF WORK, UNTIL THE JACOBS CM HAS DIRECTED THE CORRECTIVE ACTIONS TO BE TAKEN.

2. ELECTRICAL CONTRACTOR SHALL VISIT THE JOB SITE AND FAMILIARIZE THEMSELVES WITH ANY/ALL CONDITIONS AFFECTING ELECTRICAL AND COMMUNICATION INSTALLATION AND MAKE PROVISIONS AS TO THE COST THEREOF. ALL EXISTING CONDITIONS OF ELECTRICAL EQUIPMENT, ETC. THAT ARE PART OF THE FINAL SYSTEM, SHALL BE VERIFIED BY THE CONTRACTOR, PRIOR TO THE SUBMITTING OF THEIR BID. FAILURE TO COMPLY WITH THIS PARAGRAPH WILL IN NO WAY RELIEVE CONTRACTOR OF PERFORMING ALL WORK NECESSARY FOR A COMPLETE AND WORKING SYSTEM.

3. ALL WORK SHALL BE PERFORMED IN ACCORDANCE WITH THE LATEST EDITION OF THE NEC, ALL CODES AND ORDINANCES OF THE LOCAL JURISDICTION, AND POWER AND TELEPHONE COMPANIES HAVING JURISDICTION AND SHALL INCLUDE BUT ARE NOT LIMITED TO:

   A) UL – UNDERWRITERS LABORATORIES
   B) NEC – NATIONAL ELECTRICAL CODE
   C) NEMA – NATIONAL ELECTRICAL MANUFACTURERS ASSOCIATION
   D) OSHA – OCCUPATIONAL SAFETY AND HEALTH ACT
   E) SBC – STANDARD BUILDING CODE
   F) NFPA – NATIONAL FIRE PROTECTION AGENCY
   G) ANSI – AMERICAN NATIONAL STANDARDS INSTITUTE
   H) IEEE – INSTITUTE OF ELECTRICAL AND ELECTRONICS ENGINEERS
   I) ASTM – AMERICAN SOCIETY FOR TESTING MATERIALS

4. REFER TO SITE PLANS AND ELEVATIONS FOR EXACT LOCATIONS OF ALL EQUIPMENT, AND CONFIRM WITH JACOBS CM ANY SIZES AND LOCATIONS WHEN NEEDED.

5. EXISTING SERVICES: CONTRACTOR SHALL NOT INTERRUPT EXISTING SERVICES WITHOUT WRITTEN PERMISSION OF THE OWNER.

6. CONTRACTOR SHALL CONFIRM WITH LOCAL UTILITY COMPANY ANY/ALL REQUIREMENTS SUCH AS THE : LUG SIZE RESTRICTIONS, CONDUIT ENTRY, SIZE OF TRANSFORMERS, SCHEDULED DOWNTIME FOR THE OWNERS' CONFIRMATION, ETC... ANY/ALL CONFLICTS SHALL BE BROUGHT TO THE ATTENTION OF THE JACOBS CM, PRIOR TO BEGINNING ANY WORK.

7. MINIMUM WIRE SIZE SHALL BE #12 AWG, NOT INCLUDING CONTROL WIRING, UNLESS NOTED OTHERWISE. ALL CONDUCTORS SHALL BE COPPER WITH THWN INSULATION, UNLESS OTHERWISE NOTED.

8. OUTLET BOXES SHALL BE PRESSED STEEL IN DRY LOCATIONS, CAST ALLOY WITH THREADED HUBS IN WET/DAMP LOCATIONS AND SPECIAL ENCLOSURES FOR OTHER CLASSIFIED AREAS.

9. IT IS NOT THE INTENT OF THESE PLANS TO SHOW EVERY MINOR DETAIL OF THE CONSTRUCTION. CONTRACTOR IS EXPECTED TO FURNISH AND INSTALL ALL ITEMS FOR A COMPLETE ELECTRICAL SYSTEM AND PROVIDE ALL REQUIREMENTS FOR THE EQUIPMENT TO BE PLACED IN PROPER WORKING ORDER.

10. ELECTRICAL SYSTEM SHALL BE AS COMPLETELY AND EFFECTIVELY GROUNDED, AS REQUIRED BY SPECIFICATIONS, SET FORTH BY APPLICANT.

11. ALL WORK SHALL BE PERFORMED BY A LICENSED ELECTRICAL CONTRACTOR IN A FIRST CLASS, WORKMANLIKE MANNER. THE COMPLETED SYSTEM SHALL BE FULLY FUNCTIONAL AND SHALL BE APPROVED BY THE JACOBS CM AND LOCAL JURISDICTION. ANY DEFICIENCIES SHALL BE CORRECTED BY AN ELECTRICAL CONTRACTOR AT THE SOLE COST OF THE CONTRACTOR.

12. ALL WORK SHALL BE COORDINATED WITH OWNER TRADES TO AVOID INTERFERENCE WITH THE PROGRESS OF CONSTRUCTION.

13. THE CORRECTION OF ANY DEFECTS SHALL BE COMPLETED BY THE CONTRACTOR WITHOUT ANY ADDITIONAL CHARGE AND SHALL INCLUDE THE REPLACEMENT OR THE REPAIR OF ANY OTHER PHASE OF THE INSTALLATION, WHICH MAY HAVE BEEN DAMAGED THEREIN.

14. CONTRACTOR SHALL PROVIDE AND INSTALL CONDUIT, CONDUCTORS, PULL WIRES, BOXES, COVER PLATES AND DEVICES FOR ALL OUTLETS AS INDICATED.

15. DITCHING AND BACK FILL: CONTRACTOR SHALL PROVIDE FOR ALL UNDERGROUND INSTALLED CONDUIT AND/OR CABLES INCLUDING EXCAVATION AND BACKFILLING AND COMPACTION. REFER TO NOTES AND REQUIREMENTS "EXCAVATION, AND BACKFILLING".

16. MATERIALS, PRODUCTS AND EQUIPMENT, INCLUDING ALL COMPONENTS THEREOF, SHALL BE NEW AND SHALL APPEAR ON THE LIST OF U.L. APPROVED ITEMS AND SHALL MEET OR EXCEED THE REQUIREMENTS OF THE NEC, NEMA AND IECE.

17. CONTRACTOR SHALL SUBMIT SHOP DRAWINGS OR MANUFACTURER'S CATALOG INFORMATION OF ANY/ALL EQUIPMENT AND ALL OTHER ELECTRICAL ITEMS FOR APPROVAL BY THE JACOBS CM PRIOR TO INSTALLATION.

18. ANY CUTTING OR PATCHING DEEMED NECESSARY FOR ELECTRICAL WORK IS THE ELECTRICAL CONTRACTORS RESPONSIBILITY AND SHALL BE INCLUDED IN THE COST FOR WORK AND PERFORMED TO THE SATISFACTION OF THE JACOBS CM UPON FINAL ACCEPTANCE.

19. THE ELECTRICAL CONTRACTOR SHALL LABEL ALL PANELS WITH ONLY TYPEWRITTEN DIRECTORIES. ALL ELECTRICAL WIRING SHALL BE THE RESPONSIBILITY OF THE ELECTRICAL CONTRACTOR.

20. DISCONNECT SWITCHES SHALL BE UL-RATED, H.P. RATED HEAVY-DUTY, QUICK-MAKE AND QUICK-BREAK ENCLOSURES, AS REQUIRED BY EXPOSURE TYPE.

21. ALL CONNECTIONS SHALL BE MADE WITH A PROTECTIVE COATING OF AN ANTI-OXIDE COMPOUND KNOWN AS "NO-OXIDE A" BY DEARBORNE CHEMICAL COMPANY. COAT ALL WIRE SURFACES BEFORE CONNECTING. EXPOSED COPPER SURFACES, INCLUDING GROUND BARS, SHALL BE TREATED – NO SUBSTITUTIONS.

at&t
200 N. WARNER RD.
KING OF PRUSSIA, PA 19406

JACOBS
Jacobs Telecommunications, Inc.
200 N. WARNER RD., SUITE 203
KING OF PRUSSIA, PA 19406

PROJECT NO:	EP4TURES
DRAWN BY:	B. POTESTA
CHECKED BY:	P. CHAN

3	08.21.20	UPDATED
2	03.04.20	UPDATED
1	08.21.19	UPDATED – POLE RELOCATION
0	11.12.18	FINALS

8-21-2020
COMMONWEALTH OF PENNSYLVANIA
REGISTERED PROFESSIONAL
YAN WONG CHAN
ENGINEER
PE081267

IT IS A VIOLATION OF THE LAW FOR ANY PERSON, UNLESS THEY ARE ACTING UNDER THE DIRECTION OF A LICENSED PROFESSIONAL ENGINEER, TO ALTER THIS DOCUMENT

CON01_003
139 W. 3RD AVENUE
CONSHOHOCKEN, PA 19428

SHEET TITLE
GENERAL NOTES

SHEET NUMBER
GN-1

ELECTRICAL NOTES CONT'D:

22. RACEWAYS: CONDUIT SHALL BE SCHEDULE 80 PVC MEETING OR EXCEEDING NEMA TC2 – 1990. CONTRACTOR SHALL PLUG AND CAP EACH END OF SPARE AND EMPTY CONDUITS AND PROVIDE TWO SEPARATE PULL STRINGS – 200 LBS TEST POLYETHYLENE CORD. ALL CONDUIT BENDS SHALL BE A MINIMUM OF 2 FT. RADIUS. RGS CONDUITS WHEN SPECIFIED, SHALL MEET UL–6 FOR GALVANIZED STEEL. ALL FITTINGS SHALL BE SUITABLE FOR USE WITH THREADED RIDGED CONDUIT. COAT ALL THREADS WITH "BRITE ZINC" OR "COLD GALV.".

23. SUPPORT OF ALL ELECTRICAL WORK SHALL BE AS REQUIRED BY NEC.

24. CONDUCTORS: CONTRACTOR SHALL USE 98% CONDUCTIVITY COPPER WITH TYPE THWN INSULATION, UNLESS OTHERWISE NOTED, 600 VOLT, COLOR CODED. USE SOLID CONDUCTORS FOR WIRE UP TO AND INCLUDING NO. 8 AWG. USE STRANDED CONDUCTORS FOR WIRE ABOVE NO. 8 AWG.

25. CONNECTORS FOR POWER CONDUCTORS: CONTRACTOR SHALL USE PRESSURE TYPE INSULATED TWIST–ON CONNECTORS FOR NO. 10 AWG AND SMALLER. USE SOLDERLESS MECHANICAL TERMINAL LUGS FOR NO. 8 AWG AND LARGER.

26. SERVICE: AS SPECIFIED ON THE DRAWINGS, OWNER OR OWNER'S AGENT WILL APPLY FOR POWER. ALL PROVISIONS FOR TEMPORARY POWER WILL BE OBTAINED BY THE CONTRACTOR.

27. TELEPHONE OR FIBER SERVICE: CONTRACTOR SHALL PROVIDE EMPTY CONDUITS WITH PULL STRINGS AS INDICATED ON DRAWINGS.

28. ELECTRICAL AND TELCO/FIBER RACEWAYS TO BE BURIED A MINIMUM DEPTH OF 30", UNLESS OTHERWISE NOTED.

29. CONTRACTOR SHALL PLACE 6" WIDE DETECTABLE WARNING TAPE AT A DEPTH OF 6" BELOW GROUND AND DIRECTLY ABOVE ELECTRICAL AND TELCO SERVICE CONDUITS. CAUTIONS TAPE TO READ "CAUTION BURIED ELECTRIC" OR BURIED TELECOMM".

30. ALL BOLTS SHALL BE 3–16 STAINLESS STEEL.

GROUNDING NOTES:

1. ALL HARDWARE SHALL BE 3–16 STAINLESS STEEL, INCLUDING LOCK WASHERS. COAT ALL SURFACES WITH AN ANTI–OXIDANT COMPOUND, AS SPECIFIED, BEFORE MATING. ALL HARDWARE SHALL BE STAINLESS STEEL 3/8 INCH DIAMETER OR LARGER.

2. FOR GROUND BOND TO STEEL ONLY: INSERT A CADMIUM FLAT WASHER BETWEEN LUG AND STEEL, COAT ALL SURFACES WITH AN ANTI–OXIDANT COMPOUND BEFORE MATING.

3. ALL STEEL CONDUIT SHALL BE BONDED AT BOTH ENDS WITH GROUNDING BUSHING.

4. ALL ELECTRICAL AND GROUNDING AT THE POLE SITE SHALL COMPLY WITH THE NATIONAL ELECTRICAL CODE (NEC), NATIONAL FIRE PROTECTION ASSOCIATION (NFPA) 780 (LATEST EDITION), AND MANUFACTURER.

5. ALL DETAILS ARE SHOWN IN GENERAL TERMS. ACTUAL GROUNDING INSTALLATION AND CONSTRUCTION MAY VARY DUE TO SITE SPECIFIC CONDITIONS.

6. GROUND ALL ANTENNA BASES, FRAMES, CABLE RUNS, AND OTHER METALLIC COMPONENTS USING #6 GROUND WIRES. FOLLOW ANTENNA AND BTS MANUFACTURER'S PRACTICES FOR GROUNDING REQUIREMENTS.

7. ALL GROUND CONNECTIONS SHALL BE #6 AWG, UNLESS OTHERWISE NOTED. ALL WIRES SHALL BE COPPER WITH THHN, UNLESS OTHERWISE NOTED. ALL GROUND WIRE SHALL BE SOLID TIM COATED OR STRANDED GREEN INSULATED WIRE.

8. CONTRACTOR TO VERIFY AND TEST GROUND TO SOURCE, 10 OHMS MAXIMUM. PROVIDE SUPPLEMENT GROUNDING RODS AS REQUIRED TO ACHIEVE SPECIFIED OHMS READING. GROUNDING AND OTHER OPTIONAL TESTING WILL BE WITNESSED BY THE JACOBS CM.

9. NOTIFY ARCHITECT/ENGINEER IF THERE ARE ANY DIFFICULTIES INSTALLING GROUNDING SYSTEM DUE TO SITE SOIL CONDITIONS.

10. ALL HORIZONTALLY RUN GROUNDING CONDUCTORS SHALL BE INSTALLED A MINIMUM OF 30" BELOW GRADE/ 6" BELOW FROST–LINE IN TRENCH, UNLESS OTHERWISE NOTED. BACK FILL SHALL BE COMPACTED AS REQUIRED BY ARCHITECT/ENGINEER.

11. ALL GROUND CONDUCTORS SHALL BE RUN AS STRAIGHT AND SHORT AS POSSIBLE, WITH A MINIMUM OF 12" BENDING RADIUS NOT LESS THAN 90 DEGREES.

12. ACCEPTABLE CONNECTIONS FOR GROUNDING SYSTEM SHALL BE:

    A) BURNDY, HY–GRADE U.L. LISTED CONNECTORS FOR OUTDOOR USE OR AS APPROVED BY APPLICANT PROJECT MANAGER.
    B) CADWELD, EXOTHERMIC WELDS (WELDED CONNECTIONS).
    C) ONE (1) HOLE TINNED COPPER COMPRESSION (LONG BARREL) FITTINGS.

13. ALL CRIMPED CONNECTIONS SHALL HAVE EMBOSSED MANUFACTURER'S DIEMARK VISIBLE AT THE CRIMP (RESULTING FROM USE OF PROPER CRIMPING DEVICES) AND WEATHER–PROOFED WITH HEAT SHRINK.

14. ALL CONNECTION HARDWARE SHALL BE TYPE 3–16 STAINLESS STEEL (NOT ATTRACTED TO MAGNETS).

15. 15. ELECTRICAL SERVICE EQUIPMENT GROUNDING SHALL COMPLY WITH NEC, ARTICLE 250–82 AND SHALL BOND ALL EXISTING AND NEW GROUNDING ELECTRODES. NEW GROUNDING ELECTRODE SHALL INCLUDE BUT NOT LIMITED TO GROUND RODS.

TESTING AND EQUIPMENT TURN UP REQUIREMENTS:

1. RF CABLE, DATA CABLE, RADIO EQUIPMENT AND BACK HAUL EQUIPMENT TESTING WILL COMPLY WITH CURRENT INDUSTRY STANDARDS AND/OR THOSE STANDARDS OF THE EQUIPMENT MANUFACTURER OR PROVIDED TO THE CONTRACTOR PRIOR TO TESTING.

2. CONTRACTOR WILL USE THE APPROPRIATE CALIBRATED TESTING EQUIPMENT IN THE TESTING OF RF CABLE, DATA CABLE, RADIO EQUIPMENT AND BACK HAUL EQUIPMENT THAT MEET INDUSTRY STANDARDS OF THE MANUFACTURER OR THOSE STANDARDS PROVIDED TO THE CONTRACTOR PRIOR TO TESTING.

3. CONTRACTOR TO VERIFY AND RECORD ALL TEST RESULTS AND PROVIDE THESE RESULTS WITHIN THE FINAL CLOSE OUT PACKAGE.

4. ALL PERSONNEL INVOLVED IN THE TESTING OF RF CABLE, DATA CABLE, RADIO EQUIPMENT AND BACK HAUL EQUIPMENT WILL BE REQUIRED TO HAVE BEEN TRAINED AND/OR CERTIFIED IN THE PROPER TESTING OF RF CABLE, DATA CABLE, RADIO EQUIPMENT AND BACK HAUL EQUIPMENT.

5. ALL TEST RESULTS SHALL BE TIME STAMPED, RECORDED AND PRESENTED PRIOR TO ENERGIZING AND TURN UP OF ANY EQUIPMENT.

6. GPS EQUIPMENT IS NOT TO BE TESTED OR ATTACHED TO ANY CABLING DURING TESTING, DOING SO WILL DAMAGE THE GPS UNIT.

7. PRIOR TO TESTING IF THE CONTRACTOR HAS ANY QUESTIONS ABOUT THE TESTING PROCEDURES THEY ARE TO CALL AND OBTAIN ASSISTANCE FROM A QUALIFIED DESIGNATED TESTING REPRESENTATIVE.

8. EQUIPMENT IS NOT TO BE ENERGIZED UNTIL ALL TESTING HAS BEEN COMPLETED, APPROVED AND THE APPROPRIATE AUTHORITY HAS BEEN NOTIFIED AND GIVES APPROVAL TO ENERGIZE THE EQUIPMENT.

SITE WORK NOTES:

1. DO NOT EXCAVATE OR DISTURB BEYOND THE PROPERTY LINES OR LEASE LINES, UNLESS OTHERWISE NOTED.

2. SIZE, LOCATION AND TYPE OF ANY UNDERGROUND UTILITIES OR IMPROVEMENTS SHALL BE ACCURATELY NOTED AND PLACED ON AS–BUILD DRAWINGS BY GENERAL CONTRACTOR AND ISSUED TO ARCHITECT/ENGINEER AT COMPLETION OF PROJECT.

3. ALL EXISTING UTILITIES, FACILITIES, CONDITIONS AND THEIR DIMENSIONS SHOWN ON PLANS HAVE BEEN PLOTTED FROM AVAILABLE RECORDS. THE ENGINEER AND OWNER ASSUME NO RESPONSIBILITY WHATSOEVER AS TO THE SUFFICIENCY OR ACCURACY OF THE INFORMATION SHOWN ON THE PLANS OR THE MANNER OF THEIR REMOVAL OR ADJUSTMENT. CONTRACTOR SHALL BE RESPONSIBLE FOR DETERMINING EXACT LOCATION OF ALL EXISTING UTILITIES AND FACILITIES PRIOR TO START OF CONSTRUCTION. CONTRACTOR SHALL ALSO OBTAIN FROM EACH UTILITY COMPANY DETAILED INFORMATION RELATIVE TO WORKING SCHEDULES AND METHODS OF REMOVING OR ADJUSTING EXISTING UTILITIES.

4. CONTRACTOR SHALL VERIFY ALL EXISTING UTILITIES BOTH HORIZONTALLY AND VERTICALLY PRIOR TO START OF CONSTRUCTION. ANY DISCREPANCIES OR DOUBTS AS TO THE INTERPRETATION OF PLANS SHALL BE IMMEDIATELY REPORTED TO THE ARCHITECT/ENGINEER OR JACOBS CM FOR RESOLUTION AND INSTRUCTION, AND NO FURTHER WORK SHALL BE PERFORMED UNTIL THE DISCREPANCY IS CHECKED AND CORRECTED BY THE ARCHITECT/ENGINEER. FAILURE TO SECURE SUCH INSTRUCTION MEANS CONTRACTOR WILL HAVE WORKED AT THEIR OWN RISK AND EXPENSE. CONTRACTOR SHALL CALL LOCAL UTILITY LOCATE HOT LINE, SUCH AS 811, FOR UTILITY LOCATIONS A MINIMUM OF 48 HOURS PRIOR TO START OF CONSTRUCTION.

5. ALL NEW AND EXISTING STRUCTURES ON SITE AND IN AREAS TO BE DISTURBED BY CONSTRUCTION SHALL BE ADJUSTED TO FINISH ELEVATIONS PRIOR TO FINAL INSPECTION OF WORK. ANY COST RELATED TO ADJUSTING EXISTING STRUCTURES SHALL BE BORNE SOLELY BY THE CONTRACTOR.

6. GRADING OF THE SITE WORK AREA IS TO BE SMOOTH AND CONTINUOUS IN SLOPE AND IS TO FEATHER INTO EXISTING GRADES AT THE GRADING LIMITS.

7. ALL TEMPORARY EXCAVATIONS FOR THE INSTALLATION OF FOUNDATIONS, UTILITIES, ETC., SHALL BE PROPERLY LAID BACK OR BRACED IN ACCORDANCE WITH CORRECT OCCUPATIONAL SAFETY AND HEALTH ADMINISTRATION (OSHA) REQUIREMENTS.

8. STRUCTURAL FILLS SUPPORTING PAVEMENTS SHALL BE COMPACTED TO 95% OF MAXIMUM STANDARD PROCTOR DRY DENSITY, UNLESS OTHERWISE NOTED.

9. NEW GRADES NOT IN BUILDING AND DRIVEWAY IMPROVEMENT AREA TO BE ACHIEVED BY FILLING WITH APPROVED CLEAN FILL AND COMPACTED TO 95% OF STANDARD PROCTOR DENSITY.

10. ALL FILL SHALL BE PLACED IN UNIFORM LIFTS. THE LIFTS THICKNESS SHOULD NOT EXCEED THAT WHICH CAN BE PROPERLY COMPACTED THROUGHOUT ITS ENTIRE DEPTH WITH THE EQUIPMENT AVAILABLE.

11. ANY FILLS PLACED ON EXISTING SLOPES THAT ARE STEEPER THAN 10 HORIZONTAL TO 1 VERTICAL SHALL BE PROPERLY BENCHED INTO THE EXISTING SLOPE AS DIRECTED BY GEOTECHNICAL ENGINEER.

12. CONTRACTOR SHALL CLEAN ENTIRE SITE AFTER CONSTRUCTION SUCH THAT NO DEBRIS, PAPER, TRASH, WEEDS, BRUSH, EXCESS FILL, OR ANY OTHER DEPOSITS WILL REMAIN. ALL MATERIALS COLLECTED DURING CLEANING OPERATIONS SHALL BE DISPOSED OF OFF–SITE BY THE GENERAL CONTRACTOR.

13. ALL TREES AND SHRUBS WHICH ARE NOT IN DIRECT CONFLICT WITH THE IMPROVEMENTS SHALL BE PROTECTED BY THE GENERAL CONTRACTOR.

14. ALL SITE WORK SHALL BE CAREFULLY COORDINATED BY GENERAL CONTRACTOR WITH LOCAL UTILITY COMPANY, TELEPHONE COMPANY, AND ANY OTHER UTILITY COMPANIES HAVING JURISDICTION OVER THIS LOCATION.

ENVIRONMENTAL NOTES:

1. ALL WORK PERFORMED SHALL BE DONE IN ACCORDANCE WITH ISSUED PERMITS. THE CONTRACTOR SHALL BE RESPONSIBLE FOR PAYMENT OF FINES AND PROPER CLEAN UP FOR AREAS IN VIOLATION.

2. CONTRACTOR SHALL BE RESPONSIBLE FOR CONSTRUCTION AND MAINTENANCE OF EROSION AND SEDIMENTATION CONTROLS DURING CONSTRUCTION FOR PROTECTION OF ADJACENT PROPERTIES, ROADWAYS AND WATERWAYS. ALL EROSION AND SEDIMENTATION CONTROLS SHALL BE MAINTAINED IN PLACE THROUGH FINAL JURISDICTIONAL INSPECTION AND RELEASE OF SITE.

3. CONTRACTOR SHALL INSTALL/CONSTRUCT ALL NECESSARY SEDIMENT/SILT CONTROL FENCING AND PROTECTIVE MEASURES AS REQUIRED BY THE LOCAL JURISDICTION WITHIN THE LIMITS OF SITE DISTURBANCE PRIOR TO CONSTRUCTION.

4. NO SEDIMENT SHALL BE ALLOWED TO EXIT THE PROPERTY. THE CONTRACTOR IS RESPONSIBLE FOR TAKING ADEQUATE MEASURES FOR CONTROLLING EROSION. ADDITIONAL SEDIMENT CONTROL FENCING MAY BE REQUIRED IN ANY AREAS SUBJECT TO EROSION.

5. THE CONTRACTOR IS RESPONSIBLE FOR MAINTAINING POSITIVE DRAINAGE ON THE SITE AT ALL TIMES WITH SILT AND EROSION CONTROL MEASURES MAINTAINED ON THE DOWNSTREAM SIDE OF SITE DRAINAGE. ANY DAMAGE TO ADJACENT PROPERTY AS A RESULT OF EROSION WILL BE CORRECTED AT THE CONTRACTORS EXPENSE.

6. CONTRACTOR SHALL BE RESPONSIBLE FOR DAILY INSPECTIONS AND ANY REPAIRS OF ALL SEDIMENT CONTROL MEASURES INCLUDING SEDIMENT REMOVAL AS NECESSARY.

7. CLEARING OF VEGETATION AND TREE REMOVAL SHALL BE ONLY AS PERMITTED AND BE HELD TO A MINIMUM. ONLY TREES NECESSARY FOR CONSTRUCTION OF THE FACILITIES SHALL BE REMOVED.

8. SEEDING AND MULCHING AND/OR SODDING OF THE SITE WILL BE ACCOMPLISHED AS SOON AS POSSIBLE AFTER COMPLETION OF THE PROJECT FACILITIES AFFECTING LAND DISTURBANCE.

9. CONTRACTOR SHALL PROVIDE ALL EROSION AND SEDIMENTATION CONTROL MEASURES AS REQUIRED BY LOCAL, COUNTY AND STATE CODES AND ORDINANCES TO PROTECT EMBANKMENTS FROM SOIL LOSS AND TO PREVENT ACCUMULATION OF SOIL AND SILT IN STREAMS AND DRAINAGE PATHS LEAVING THE CONSTRUCTION AREA. THIS MAY INCLUDE, BUT IS NOT LIMITED TO SUCH MEASURES AS SILT FENCES, STRAW BALE SEDIMENT BARRIERS, AND CHECK DAMS.

10. RIP RAP OF SIZES INDICATED SHALL CONSIST OF CLEAN, HARD, SOUND, DURABLE, UNIFORM IN QUALITY STONE FREE OF ANY DETRIMENTAL QUANTITY OF SOFT, FRIABLE, THIN, ELONGATED OR LAMINATED PIECES, DISINTEGRATED MATERIAL, ORGANIC MATTER, OIL, ALKALI, OR OTHER DELETERIOUS SUBSTANCES.

11. GENERAL CONTRACTOR TO PLACE MATERIAL AT ALL CATCH BASINS ADJACENT TO CONSTRUCTION SITE TO PREVENT SOLID WASTE CONTAMINATION FROM ENTERING SEWER SYSTEM.

at&t
200 N. WARNER RD.
KING OF PRUSSIA, PA 19406

JACOBS
Jacobs Telecommunications, Inc.
200 N. WARNER RD., SUITE 203
KING OF PRUSSIA, PA 19406

PROJECT NO:	EP4TURES
DRAWN BY:	B. POTESTA
CHECKED BY:	P. CHAN

3	08.21.20	UPDATED
2	03.04.20	UPDATED
1	08.21.19	UPDATED – POLE RELOCATION
0	11.12.18	FINALS

8-21-2020
COMMONWEALTH OF PENNSYLVANIA
REGISTERED PROFESSIONAL
YAN WONG CHAN
ENGINEER
PE081267

IT IS A VIOLATION OF THE LAW FOR ANY PERSON, UNLESS THEY ARE ACTING UNDER THE DIRECTION OF A LICENSED PROFESSIONAL ENGINEER, TO ALTER THIS DOCUMENT

CON01_003
139 W. 3RD AVENUE
CONSHOHOCKEN, PA 19428

SHEET TITLE
GENERAL NOTES

SHEET NUMBER
GN-2

FOUNDATION, EXCAVATION AND BACKFILL NOTES:

1. ALL FINAL GRADED SLOPES SHALL BE A MAXIMUM OF 3 HORIZONTAL TO 1 VERTICAL, UNLESS OTHERWISE NOTED.

2. BACKFILL OF POLE SHALL BE PERFORMED IN ONE (1) OF THREE (3) OPTIONS:

   A) PREFERRED: RAINBOW INDUSTRIES POLE SETTING FOAM SHALL BE INSTALLED PER MANUFACTURER SPECS. FOAM SHALL ALWAYS BE USED FRO POOR SOILS.
   B) SECONDARY: CONCRETE (REQUIRES JACOBS CM WRITTEN APPROVAL)
   ALLOWABLE SOIL PRESSURE = 2000 PSF (ASSUMED).
   NON-NATIVE SOILS SHALL BE REMOVED FROM BORE AREA AND SHALL NOT BE REUSED FOR BACKFILL.

3. ALL EXCAVATIONS PREPARED FOR PLACEMENT OF CONCRETE SHALL BE OF UNDISTURBED SOILS, SUBSTANTIALLY HORIZONTAL AND FREE FROM ANY LOOSE, UNSUITABLE MATERIAL OR FROZEN SOILS, AND WITHOUT THE PRESENCE OF POUNDING WATER. DEWATERING FOR EXCESS GROUND WATER SHALL BE PROVIDED WHEN REQUIRED. COMPACTION OF SOILS UNDER CONCRETE PAD FOUNDATIONS SHALL NOT BE LESS THAN 95% OF THE MODIFIED PROCTOR MAXIMUM DRY DENSITY FOR THE SOIL IN ACCORDANCE WITH ASTM D1557.

4. CONCRETE FOUNDATIONS SHALL NOT BE PLACED ON ORGANIC OR UNSUITABLE MATERIAL. IF ADEQUATE BEARING CAPACITY IS NOT ACHIEVED AT THE DESIGNED EXCAVATION DEPTH, THE UNSATISFACTORY SOIL SHALL BE EXCAVATED TO ITS FULL DEPTH AND EITHER BE REPLACED WITH MECHANICALLY COMPACTED GRANULAR MATERIAL OR THE EXCAVATION SHALL BE FILLED WITH CONCRETE OF THE SAME TYPE SPECIFIED FOR THE FOUNDATION. CRUSHED STONE MAY BE USED TO STABILIZE THE BOTTOM OF THE EXCAVATION. ANY STONE SUB BASE MATERIAL, IF USED, SHALL NOT SUBSTITUTE FOR REQUIRED THICKNESS OF CONCRETE.

5. ALL EXCAVATIONS SHALL BE CLEAN OF UNSUITABLE MATERIAL SUCH AS VEGETATION, TRASH, DEBRIS, AND SO FORTH PRIOR TO BACK FILLING. BACK FILL SHALL CONSIST OF APPROVED MATERIALS SUCH AS EARTH, LOAM, SANDY CLAY, SAND AND GRAVEL, OR SOFT SHALE, FREE FROM CLODS OR LARGE STONES OVER 2 1/2" MAX DIMENSIONS. ALL BACK FILL SHALL BE PLACED IN COMPACTED LAYERS.

6. ALL FILL MATERIALS AND FOUNDATION BACK FILL SHALL BE PLACED IN MAXIMUM 6" THICK LIFTS BEFORE COMPACTION. EACH LIFT SHALL BE WETTED IF REQUIRED AND COMPACTED TO NOT LESS THAN 95% OF THE MODIFIED PROCTOR MAXIMUM DRY DENSITY FOR SOIL IN ACCORDANCE WITH ASTM D1557.

7. NEWLY PLACED CONCRETE FOUNDATIONS SHALL CURE A MINIMUM OF 72 HOURS PRIOR TO BACK FILLING.

8. FINISHED GRADING SHALL BE SLOPED TO PROVIDE POSITIVE DRAINAGE AND PREVENT STANDING WATER. THE FINAL (FINISH) ELEVATION OF SLAB FOUNDATIONS SHALL SLOPE AWAY IN ALL DIRECTIONS FROM THE CENTER. FINISH GRADE OF CONCRETE PADS SHALL BE A MAXIMUM OF 4 INCHES ABOVE FINAL FINISH GRADE ELEVATIONS WHERE REQUIRED.

9. NEWLY GRADED GRAVEL SURFACE AREAS TO RECEIVE GRAVEL SHALL BE COVERED WITH GEOTEXTILE FABRIC TYPE: TYPAR-3401 AS MANUFACTURED BY TYPAR GEOSYNTHETICS OR AN APPROVED EQUIVALENT, SHOWN ON PLANS. THE GEOTEXTILE FABRIC SHALL BE BLACK IN COLOR TO CONTROL THE RECURRENCE OF VEGETATIVE GROWTH AND EXTEND TO WITHIN 1 FOOT OUTSIDE THE SITE FENCING OR ELECTRICAL GROUNDING SYSTEM PERIMETER WHICH EVER IS GREATER. ALL FABRIC SHALL BE COVERED WITH A MINIMUM OF 4" DEEP COMPACTED STONE OR GRAVEL AS SPECIFIED. I.E. DOT TYPE NO. 57 FOR FENCED COMPOUND: DOT TYPE NO. 67 FOR ACCESS DRIVE AREA, UNLESS OTHERWISE NOTED.

10. IN ALL AREAS TO RECEIVE FILL: REMOVE ALL VEGETATION, TOPSOIL, DEBRIS, WET AND UNSATISFACTORY SOIL MATERIALS, OBSTRUCTIONS, AND DELETERIOUS MATERIALS FROM GROUND SURFACE. PLOW STRIP OR BREAK UP SLOPED SURFACES STEEPER THAN 1 VERTICAL TO 4 HORIZONTAL SUCH THAT FILL MATERIAL WILL BIND WITH EXISTING/PREPARED SOIL SURFACE.

11. WHEN SUB GRADE OR PREPARED GROUND SURFACE HAS A DENSITY LESS THAN THAT REQUIRED FOR THE FILL MATERIAL, SCARIFY THE GROUND SURFACE TO DEPTH REQUIRED. PULVERIZE, MOISTURE-CONDITION AND/OR AERATE THE SOILS AND RECOMPACT TO THE REQUIRED DENSITY PRIOR TO PLACEMENT OF FILLS.

12. IN AREAS WHICH EXISTING GRAVEL SURFACING IS REMOVED OR DISTURBED DURING CONSTRUCTION OPERATIONS, REPLACE GRAVEL SURFACING TO MATCH ADJACENT GRAVEL SURFACING AND RESTORED TO THE SAME THICKNESS AND COMPACTION AS SPECIFIED. ALL RESTORED GRAVEL SURFACING SHALL BE FREE FROM CORRUGATIONS AND WAVES.

13. EXISTING GRAVEL SURFACING MAY NOT BE REUSED.

14. GRAVEL SUB SURFACE SHALL BE PREPARED TO REQUIRED COMPACTION AND SUB GRADE ELEVATIONS BEFORE GRAVEL SURFACING IS PLACED AND/OR RESTORED. ANY LOOSE OR DISTURBED MATERIALS SHALL BE THOROUGHLY COMPACTED AND ANY DEPRESSIONS IN THE SUB GRADE SHALL BE FILLED AND COMPACTED WITH APPROVED SELECTED MATERIAL. GRAVEL SURFACING MATERIAL SHALL NOT BE USED FOR FILLING DEPRESSIONS IN THE SUB GRADE.

15. PROTECT EXISTING GRAVEL SURFACING AND SUB GRADE IN AREAS WHERE EQUIPMENT LOADS WILL OPERATE. USE PLANKING "MATTS" OR OTHER SUITABLE PROTECTION DESIGNED TO SPREAD EQUIPMENT LOADS AS MAY BE NECESSARY. REPAIR ANY DAMAGE TO EXISTING GRAVEL SURFACING OR SUB GRADE WHERE SUCH DAMAGE IS DUE TO THE CONTRACTORS OPERATIONS.

16. DAMAGE TO EXISTING STRUCTURES AND/OR UTILITIES RESULTING FROM CONTRACTORS NEGLIGENCE SHALL BE REPAIRED AND/OR REPLACED TO THE OWNERS SATISFACTION AT NO ADDITIONAL COST TO THE CONTRACT.

17. ALL SUITABLE BORROW MATERIAL FOR BACK FILL OF THE SITE SHALL BE INCLUDED IN THE BID. EXCESS TOPSOIL AND UNSUITABLE MATERIAL SHALL BE DISPOSED OF OFF-SITE AT LOCATIONS APPROVED BY GOVERNING AGENCIES AT NO ADDITIONAL COST TO THE CONTRACT.

at&t
200 N. WARNER RD.
KING OF PRUSSIA, PA 19406

JACOBS
Jacobs Telecommunications, Inc.
200 N. WARNER RD., SUITE 203
KING OF PRUSSIA, PA 19406

PROJECT NO:	EP4TURES
DRAWN BY:	B. POTESTA
CHECKED BY:	P. CHAN

3	08.21.20	UPDATED
2	03.04.20	UPDATED
1	08.21.19	UPDATED – POLE RELOCATION
0	11.12.18	FINALS

8-21-2020

COMMONWEALTH OF PENNSYLVANIA
REGISTERED PROFESSIONAL
YAN WONG CHAN
ENGINEER
PE081267

IT IS A VIOLATION OF THE LAW FOR ANY PERSON, UNLESS THEY ARE ACTING UNDER THE DIRECTION OF A LICENSED PROFESSIONAL ENGINEER, TO ALTER THIS DOCUMENT

CON01_003
139 W. 3RD AVENUE
CONSHOHOCKEN, PA 19428

SHEET TITLE
GENERAL NOTES

SHEET NUMBER
GN-3